Haskel
MILTON ROY

PNEUMATIC AND HYDRAULIC DRIVEN GAS BOOSTERS

PERFORMANCE • QUALITY • RELIABILITY

Why Use a Haskel Gas Booster

This brochure introduces pneumatic and hydraulic driven gas boosters and mechanical diaphragm compressors. These gas booster compressors offer a flexible and efficient source for delivering high pressure gases.

Oxygen or High Purity Cleaning: Haskel boosters are noted for their cleanliness and can handle pure gases such as oxygen without risk of any contamination. (Special cleaning required – advise factory.) Haskel's oxygen cleaned products are certified per Mil Spec 1330. Refer to the Knowledge Library Link on the Haskel website, www.haskel.com, for the Oxygen Usage - Best Practice Guide.

Multi-Staging Capability: For higher flow rates and pressures, beyond the capability of a single gas booster, one or more boosters of the same ratio may be plumbed in parallel and then in series with one or more boosters of the same ratio.

High Flow Rates at High Pressures: When high flow rates at high pressures are needed, the booster can charge a receiver to an even higher pressure level, thus storing a volume of gas available for rapid release at a constant pressure through a pressure reducing valve.

Cost Savings: Most industrial gases are commonly delivered at pressures of 2,000 – 2,600 psi in steel cylinders. If the gas is to be used well below the supply pressure, the pressurized supply is easily piped and controlled to the point of use with simple valving. However, if the end use requires the gas to be used at higher pressures than the supply it will have to be boosted. Gas Boosters can utilize all the gas from a supply source such as cylinders, and boost the gas to whatever pressures (and flows) are required by the application; thus utilizing all the gas volume from the supply source.

If the application requires a pressure greater than common supply cylinder pressures, a booster can often be justified not only because of utilization of the gas, but also because it will eliminate the need to purchase the gas in special higher pressure more costly supply cylinders such as 3,600 or 6,000 psi.

Pneumatic Driven Gas Booster Features

- Reliable, easy to maintain, compact and robust
- No heat, flame or spark risk
- Infinitely variable cycling speed and output
- Pneumatic driven models do not require electrical connection
- Easy to apply automatic controls
- No limit or adverse affect to continuous stop/start applications
- Seal systems designed for long working life
- No airline lubricator required
- Hydrocarbon free – separation between air and gas sections
- Pressures to 39,000 psi (2690 bar)
- Built-in cooling (most models)
- Standard & custom systems available
- Suitable for most gases
- Single, double acting, and two-stage models
- Ability to stall at any predetermined pressure and hold the fixed pressure without consuming power or generating heat

Introduction to Pneumatic Driven Gas Boosters

Theory of Operation

Haskel Gas Boosters consist of a large area reciprocating air drive piston directly coupled by a connecting rod to a small area gas piston. The gas piston operates in a high pressure gas barrel section. Each gas barrel end cap contains high pressure inlet and outlet check valves. Varying applications require many different booster and horse power (HP) combinations. Haskel can assist with HP and Cooling requirements and provide circuitry assistance on the following issues: PID Control - review and advisement, electrical control, and heat exchanger recommendations. General HPU recommendations and guidelines are available from Haskel drawing 87100-TAB. The air drive section includes a cycling spool and pilot valves that provide continuous reciprocating action when air is supplied to the air drive inlet. The ratio between the area of the air drive piston and the gas driven piston is indicated by the number in the model description and approximates the maximum pressure the gas booster is capable of generating.

Isolation of the gas compression chambers from the air drive section is provided by three sets of dynamic seals. The intervening two chambers are vented to atmosphere. This design prevents air drive contamination from entering the gas stream.

Cooling is provided by routing the cold exhausted drive air through an individual jacket surrounding the gas barrel.

Check valves also allow for the equalization of upstream and downstream pressure prior to boosting, therefore the gas booster only needs to "raise" the upstream pressure to the required pressure and does not have to raise it from atmospheric pressure.

Operating temperatures for Gas Booster

There are two distinct sections: the air drive section and the gas barrel section.

Air Drive Section- Standard Air Drive Seals should perform reliably within a temperature range of (25°F to 150°F) (-4°C to 65°C). Lower temperatures will cause air/gas leakage; higher temperatures reduce seal life. Haskel recommends a minimum Class 4 air quality per ISO 8573.1 standards. For operation at extremely low temperatures, consult factory.

Gas Barrel Section- Low temperatures normally have little effect on the operation of standard parts and seals. The heat from the compressing gas helps to balance out an acceptable temperature.

Maximum average acceptable temperature 115°C (240°F).

Haskel gas boosters are used for boosting most all commonly available industrial gases. However, the gas should be "Dry Gas", (no moisture content.) Some gases cannot be pumped with standard boosters, e.g. pure Oxygen or Hydrogen. Depending on the gas and application, e.g. Dry Gas Seal applications, some boosters will require special seals, materials of construction, venting, special cleaning and other considerations. Knowing the specific gas is also necessary to determine gas compressibility at the desired pressure. Compressibility is a factor used in calculating flow rates at different pressures or filling times into a vessel.

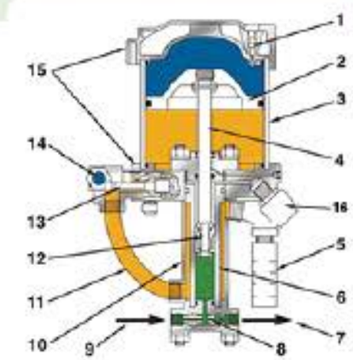

Figure 1

Figure 1: Example of Single Stage, Single acting Booster

1. Pilot Valve
2. Air Piston
3. Air Drive Barrel
4. Connecting Rod
5. Exhaust Muffler
6. High Pressure Barrel
7. Booster Outlet
8. Check Valves
9. Booster Inlet
10. Cooling Jacket
11. Air Exhaust Tube
12. Gas Piston
13. Air Cycling Valve
14. Air Drive Inlet Port
15. Upper & Lower Caps
16. Vent Port Breather

Gas booster compressors are suitable for transfer and pressurization of:

1. Nitrogen (N_2)
2. Helium (He)
3. Breathing Air (N_2O_2)
4. Nitrous Oxide (N_2O)
5. Carbon Dioxide (CO_2)
6. Neon (Ne)
7. Argon (Ar)
8. Sulphur Hexafluoride (SF_6)
9. Oxygen (O_2)*
10. Carbon Monoxide (C)**
11. Hydrogen (H_2)**
12. Methane (CH_4)**
13. Ethylene (C_2H_4)**
14. Deuterium (D_2)**
15. Natural Gas (CH_4)**
    (often contains high proportion of CO_2 & N_2)

Note: Liquefied gases (propane, CO_2, nitrous oxide, halons, etc.) can be boosted as a liquid or gas in controlled applications.

** Oxygen (O_2)- maximum safe working pressure 345 bar (5000 psi).*

*** For these gases (10-15), the gas booster must be operated in a safe and well ventilated area and vent(s) piped to controlled environment.*

Pneumatic Driven Gas Booster Configurations

Single acting, single stage boosters are the smallest and lightest with pressures to 39,000 psi. Double acting, single stage provides twice the delivery of a single acting single stage booster. Two stage models are used for high gas compression ratios.

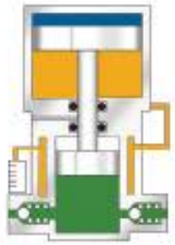

Model AG
Single Stage, Single Acting

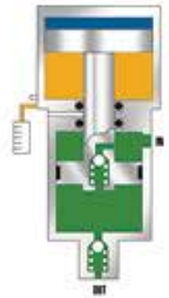

Model AG
Single Stage, Single Acting, Flow Thru Piston

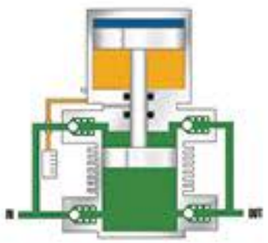

Model AGD
Single Stage, Double Acting, Cooling Fins

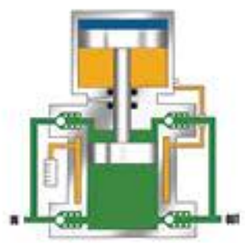

Model AGD-4 (only)
Single Stage, Double Acting, Cooling Jacket

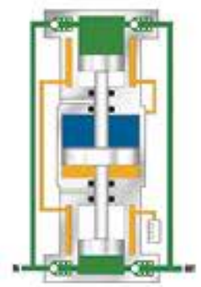

Model AGD
Single Stage, Double Acting, Cooling Jackets

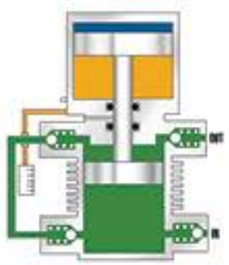

Model AGT
Two Stage, Cooling Fins

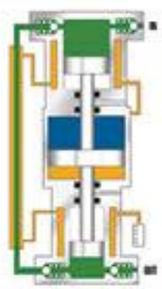

Model AGT
Two Stage, Cooling Jackets

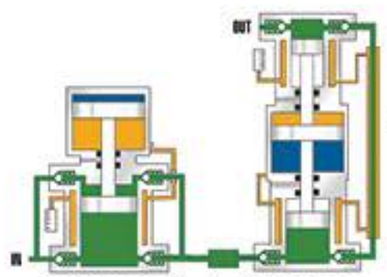

Model AGD-4 feeding into Model AGT-x/x

Multi stage - Two boosters. More than one booster of the same ratio may be used for each stage.

Blue=Compressed Air *Yellow=Exhaust Drive Air* *Green=Gas Media*

AG-50 High-ratio gas booster, single stage, single acting

AGD-30 - Medium-ratio gas booster, single stage double acting, single air head

AGT-30/75- Two stage gas booster single air head, cooling jacket

Metric Conversion Table

Multiply	By	To Obtain
PSI	0.0703	Kg/Cm2
SCFM	0.0283	Cu. Meters/min.
Inches	25.4	Millimeters
Pounds	0.453	Kilograms

Selecting a Pneumatic Driven Gas Booster

Air driven gas boosters have seven significant operating parameters that determine their selection for any application. These are as follows:

1. Maximum discharge pressure?
2. Flowrate
   a. Is it constant?
      i. What is flowrate required?
   b. Is it filling a vessel?
      i. What is vessel size (water volume)?
      ii. What is fill time required?
3. Supply
   a. Is it at constant pressure?
   b. Is it decreasing?
      i. What is initial pressure?
      ii. What is the minimum pressure?
4. Air drive pressure available?
5. Air drive volume available?
6. What is the gas?
7. What is the application?

The selection of the proper booster for any application starts with determining which booster "series" will provide the amount of flow and pressure required. The ability of the booster to *generate pressure* is a function of the drive pressure, multiplied by the nominal booster ratio. The ability to *generate flow* is a function of the quantity of air available to drive it, the displacement per cycle of the booster, and volumetric efficiency.

Within each booster series, there are standard materials of construction available. For applications involving aggressive gases, such as Hydrogen, Helium and CO_2, some material substitutions are required.

Single Acting Single Stage "AG" boosters provide economical means of boosting pressure for testing or small components and similar applications where volume is small and efficiency is not important. Control of maximum outlet pressure is accomplished with the use of an air drive pressure regulator. Maximum outlet pressure is drive area ratio multiplied by air pressure.

Double Acting Single Stage "AGD" boosters not only pump twice the volume of a Single Acting, Single Stage Booster per cycle, but also require less air drive since the inlet gas pressure is assisting the air drive in each direction, providing a substantial portion of the required driving force. These models provide efficient means of boosting large volumes of gas at low to medium compression ratios. Maximum outlet pressure is drive area ratio times air drive pressure PLUS gas supply pressure.

Two-Stage "AGT" boosters provide efficient means of boosting to a high gas compression ratio since the ratio per stage is low. Maximum outlet pressure with these models is drive area ratio multiplied by air drive pressure plus supply pressure multiplied by the area ratio of the two gas pistons.

Since these models have interconnected gas pistons, they multiply supply pressure during the "interstage" stroke by the area ratio of the two gas pistons. If supply pressure is too high, the booster may have "interstage stall" at an outlet pressure substantially less than that obtainable on the "output" stroke. This limitation does not apply if outlet pressure is less than the "maximum supply" times the area ratio of the two gas pistons. Remember, this condition only applies to two stage models.

Specific performance information for your application may be obtained by referring to the **Sample Performance Chart** on page 8 of this catalog, or from a Haskel distributor. To locate a Haskel distributor near you, view the Distribution link on our website at www.haskel.com, or contact Haskel direct.

Model Number Configuration

8 - AGT - 15/75 - C - 28881

- **8** – Nominal Diameter of Air "Driven" Piston (Inches). Used if diameter is other than 5-3/4" (standard).
- **AGT** – Base Model: AG=Single Stage, Single Acting; AGD=Single Stage, Double Acting; AGT=Two Stage
- **15/75** – Area Ratio – Nominal XXX/XXX (on AGT models) shows nominal area ratio for both first and second stages
- **C** – Air controls installed: 1. Air Drive Filter 2. Regulator w/gage 3. Shut off/speed control valve
- **28881** – Controls:

C	Controls: airline filter, reg w/gauge and manual start/stop
C8	On 5-3/4" drive 1/2 NPT
C13	On 8" or 14" drive 3/4 NPT
17860	Electrical stroke counter provision (Includes BZE6-2RQ) micro switch
25721	Mechanical stroke counter-installed (8 digit)
28881	External pilot modification - for 5-3/4" series
29125	External pilot modification - for 8" or 14" series
29376	Three way cycling spool for 5-3/4" series and 14" series
29702	Single stroke modification for 5-3/4" series and 14" series pump
50341	5-3/4" low permeability seals for CO_2 gas service
50606	8" low permeability seals for CO_2 gas service
51050	Extreme service cycling modification for 5-3/4" series pump
54312	Extreme service cycling modification for 8" or 14" series
56611	Vent purge with 15 psi relief - single end models
56611-2	Vent purge with 15 psi relief for 5-3/4", 8" or 14" series
57875	Panel with regulator for mounting remote APS
54827	Level II cleaning and certification of gas sections.
58888	Cycle Timer
80862	Viton air drive
86337	Extended life air drive seals
82500	ATEX Modification

Model Selection Chart

LEGEND: Ps = Gas Supply Pressure, **Pa** = Drive Pressure, **Po** = Outlet Pressure

	Model Number	Maximum Rated Gas Supply		Min. Gas Supply Pressure		Maximum Rated Gas Outlet: Inert Gas		Maximum Rated Gas Outlet: Oxygen		Maximum Rated Gas Outlet: Hydrogen		Static Outlet Stall Pressure Formula	Piston Displacement Per Cycle		Gas Inlet/Outlet Connections	Weight
		PSIG	BAR	PSIG	BAR	PSIG	BAR	PSIG	BAR	PSIG	BAR		Cu. In.	ML		LB (KG)
Single Acting Single Stage Model AG	4AG-25	4500	310	25	1.7	4500	310	4500	310	N/A	N/A	25 Pa	1.23	20.2	3/8" SAE Both Ports	12 (5)
	AG-4	1250	86	ATM	ATM	1250	86	1250	86	N/A	N/A	4 Pa	10	163.9	3/8" NPT Both Ports	25 (11)
	AG-7	1050	72	25	1.7	1050	72	1050	72	N/A	N/A	7 Pa	13.2	216.3	3/8" NPT Both Ports	30 (14)
	AG-15	2250	155	50	3.5	2250	155	2250	155	N/A	N/A	15 Pa	6.2	101.6	Interchangeable 3-3/8" SAE or 1/4"- H/P (BuTech) Both Ports	27 (12)
	AG-30	4500	310	100	7	4500	310	4500	310	4500	310	30 Pa	3.1	50.8	Interchangeable 3-3/8" SAE or 1/4"- H/P (BuTech) Both Ports	27 (12)
	AG-50	7500	517	100	7	7500	517	5000	345	N/A	N/A	50 Pa	1.96	32.1	Interchangeable 3-3/8" SAE or 1/4"- H/P (BuTech) Both Ports	27 (12)
	AG-62	9000	620	200	14	9000	620	5000	345	9000	620	60 Pa	3.1	50.8	Interchangeable 3-3/8" SAE or 1/4"- H/P (BuTech) Both Ports	35 (16)
	AG-75	11250	775	250	17	11250	775	5000	345	11250	775	75 Pa	1.2	19.6	Interchangeable 3-3/8" SAE or 1/4"- H/P (BuTech) Both Ports	27 (12)
	AG-102	7500	517	100	7	15000	1034	5000	345	N/A	N/A	100 Pa	1.96	32.1	Interchangeable 3-3/8" SAE or 1/4"- H/P (BuTech) Both Ports	35 (16)
	AG-152	20000	1380	250	17	20000	1380	5000	345	15000	1034	150 Pa	1.2	19.6	Interchangeable 3-3/8" SAE or 1/4"- H/P (BuTech) Both Ports	27 (12)
	AG-233	22500	1551	250	17	22500	1551	N/A	N/A	N/A	N/A	225 Pa	1.2	19.6	Interchangeable 3-3/8" SAE or 1/4"- H/P (BuTech) Both Ports	40 (18)
	AG-303	39000	2690	500	34	39000	2690	N/A	N/A	N/A	N/A	300 Pa	0.89	14.6	1/4"-H/P(BuTech) both ports	44 (20)
Double Acting Single Stage Model AGD	AGD-1.5	300	21	ATM	ATM	300	21	300	21	N/A	N/A	1.5 Pa+Ps	60	983.2	Inlet Port 3/4" NPT Outlet Port 1/2" NPT	44 (20)
	AGD-4	1250	86	ATM	ATM	1250	86	1250	86	N/A	N/A	4 Pa+Ps	19.3	316.3	3/8" NPT Both Ports	31 (14)
	AGD-7	2500	172	25	1.7	2500	172	2500	172	2500	172	7 Pa+Ps	26.4	432.6	Inlet Port: 3/8" NPT Outlet Port: 3/8" NPT 2 ea./inlet & outlet	35 (16)
	AGD-14	3500	241	25	1.7	5000	345	5000	345	N/A	N/A	14 Pa+Ps	26.4	432.6	Inlet Port: 3/8" NPT Outlet Port: 3/8" NPT	49 (22)
	AGD-15	5000	345	50	3.5	5000	345	5000	345	4000	276	15 Pa+Ps	12.4	203.2	Interchangeable 3-3/8" SAE or 1/4"- H/P both Ports. 2 ea. inlet & outlet	35 (16)
	AGD-30	9000	620	100	7	9000	620	5000	345	9000	620	30 Pa+Ps	6.2	101.6	Interchangeable 3-3/8" SAE or 1/4"- H/P both, Ports. 2 ea. inlet & outlet	38 (17)
	AGD-32	5000	345	50	3.5	5000	345	5000	345	4000	276	30 Pa+Ps	12.4	203.2	Interchangeable 3-3/8" SAE or 1/4"- H/P both Ports. 2 ea. inlet & outlet	49 (22)
	AGD-50	15000	1034	100	7	15000	1034	5000	345	N/A	N/A	50 Pa+Ps	3.9	63.9	Interchangeable 3-3/8" SAE or 1/4"- H/P both Ports. 2 ea. inlet & outlet	39 (18)
	AGD-62	9000	620	200	14	9000	620	5000	345	9000	620	60 Pa+Ps	6.2	101.6	Interchangeable 3-3/8" SAE or 1/4"- H/P both Ports. 2 ea. inlet & outlet	49 (22)
	AGD-75	15000	1034	250	17	15000	1034	5000	345	15000	1034	75 Pa+Ps	2.4	39.3	Interchangeable 3-3/8" SAE or 1/4"- H/P both Ports. 2 ea. inlet & outlet	39 (18)
	AGD-102	15000	1034	100	7	15000	1034	5000	345	15000	1034	100 Pa+ Ps	3.9	63.9	Interchangeable 3-3/8" SAE or 1/4"- H/P both Ports. 2 ea. inlet & outlet	49 (22)
	AGD-152	25000	1724	250	17	25000	1724	N/A		15000	1034	150 Pa+Ps	2.4	39.3	Interchangeable 3-3/8" SAE or 1/4"- H/P both Ports. 2 ea. inlet & outlet	49 (22)
Two Stage Model AGT	AGT-4	1250	86	1/4 ATM	1/4 ATM	1250	86	1250	86	N/A		4 Pa+Ps	10	164	3/8" NPT Both Ports	25 (11)
	AGT-7/15	6 Pa to 2500[1]	6 Pa to 172[1]	25	1.7	5000	345	5000	345	4000	276	15 Pa+2 Ps	13.2	216.3	Inlet Port: 3/8" NPT Outlet Port: 3/8" SAE or 1/4" H/P (BuTech)	40 (18)
	AGT-7/30	2 Pa to 2500[1]	2 Pa to 172[1]	25	1.7	9000	620	5000	345	9000	620	30 Pa+4 Ps	13.2	216.3	Inlet Port: 3/8" NPT Outlet Port: 3/8" SAE or 1/4" H/P (BuTech)	41 (19)
	AGT-14/32	12 Pa to 2500[1]	12 Pa to 172[1]	25	1.7	5000	345	5000	345	4000	276	60 Pa+2 Ps	13.2	216.3	Inlet Port: 3/8" NPT Outlet Port: 3/8" SAE or 1/4" H/P (BuTech)	46 (21
	AGT-14/62	4 Pa to 2500[1]	4 Pa to 172[1]	25	1.7	9000	620	5000	345	9000	620	60 Pa+4 Ps	13.2	216.3	Inlet Port: 3/8" NPT Outlet Port: 3/8" SAE or 1/4" H/P (BuTech)	41 (19)
	AGT-15/30	15 Pa to 2500[1] 9000[2]	15 Pa to 172[1] (345)	50	3.5	9000 9000[2]	620 (345)	5000	345	9000	620	30 Pa+2 Ps	6.2	101.6	Interchangeable 3/8" SAE or 1/4" H/P (BuTech) Both Ports	39 (18)
	AGT-15/50	65 Pa to 5000[1]	65 Pa to 345[1]	100	7	15000	1034	5000	345	15000	1034	50 Pa+3.3 Ps	3.1	50.8	Interchangeable 3-3/8" SAE or 1/4"- H/P (BuTech) Both Ports	38 (17)

	Model Number	Maximum Rated Gas Supply		Min. Gas Supply Pressure		Maximum Rated Gas Outlet: Inert Gas		Maximum Rated Gas Outlet: Oxygen		Maximum Rated Gas Outlet: Hydrogen		Static Outlet Stall Pressure Formula	Piston Displacement Per Cycle		Gas Inlet/Outlet Connections	Weight
		PSIG	BAR	PSIG	BAR	PSIG	BAR	PSIG	BAR	PSIG	BAR		Cu. In.	ML		LB (KG)
Two Stage Model AGT	AGT-15/75	2.5 Pa to 5000[1]	2.5 Pa to 345[1]	100	7	15000	1034	5000	345	15000	1034	75 Pa+5 Ps	6.2	101.6	Interchangeable 3/8" SAE or 1/4" H/P (BuTech) Both Ports	39 (18)
	AGT-30/50	45 Pa to 9000[1]	45 Pa to 620[1]	100	7	15000	1034	5000	345	15000	1034	50 Pa+1.6 Ps	3.1	50.8	Interchangeable 3-3/8" SAE or 1/4" - H/P (BuTech) Both Ports	38 (17)
	AGT-30/75	20 Pa to 9000[1]	20 Pa to 620[1]	100	7	15000	1034	5000	345	15000	1034	75 Pa+2.5 Ps	3.1	50.8	Interchangeable 3-3/8" SAE or 1/4" - H/P (BuTech) Both Ports	39 (18)
	AGT-32/62	30 Pa to 2500[1] 5000[2]	30 Pa to 172[1] (345)	100	7	9000 5000[2]	620 (345)	5000	345	9000	620	60 Pa+2 Ps	6.2	101.6	Interchangeable 3/8" SAE or 1/4" H/P (BuTech) Both Ports	49 (22)
	AGT-32/102	10 Pa to 9000[1]	10 Pa to 620[1]	100	7	15000	1034	5000	345	15000	1034	75 Pa+3.3 Ps	3.1	50.8	Interchangeable 3/8" SAE or 1/4" H/P (BuTech) Both Ports	49 (22)
	AGT-32/152	7 Pa to 5000[1]	7 Pa to 345[1]	100	7	15000	1034	5000	345	15000	1034	150 Pa+5 Ps	6.2	101.6	Interchangeable 3/8" SAE or 1/4" H/P (BuTech) Both Ports	39 (18)
	AGT-62/102	90 Pa to 9000[1]	90 Pa to 620[1]	100	7	15000	1034	5000	345	15000	1034	100 Pa+1.6 Ps	6.2	101.6	Interchangeable 3/8" SAE or 1/4" H/P (BuTech) Both Ports	39 (18)
	AGT-62/152	40 Pa to 3600[1] 9000[2]	40 Pa to 249[1] (621)	100	7	20000 9000[2]	1379 (621)	N/A	N/A	15000	1034	150 Pa+2.5 Ps	2.4	39.3	Interchangeable 3/8" SAE or 1/4" H/P (BuTech) Both Ports	49 (22)
	AGT-62/152H	40 Pa to 3600[1] 9000[2]	40 Pa to 249[1] (621)	100	7	25000 9000[2]	1723 (621)	N/A	N/A	N/A	N/A	150 Pa+2.5 Ps	2.4	39.3	Interchangeable 3/8" SAE or 1/4" H/P (BuTech) Both Ports	51 (23)
Double Acting Single Stage 8" Model AGD	8AGD-1	300	21	ATM	ATM	300	21	300	21	N/A	N/A	1.5 Pa+Ps	400	6554.8	3/4" NPT Both Ports	121 (55)
	8AGD-2	300	21	ATM	ATM	300	21	300	21	N/A	N/A	2 Pa+Ps	200	3277	3/4" NPT Both Ports	121 (55)
	8AGD-2.8	800	55	ATM	ATM	800	55	800	55	N/A	N/A	2.8 Pa+Ps	125	2048	1/2" NPT (2 ea) Inlet/Outlet Ports	121 (55)
	8AGD2-2.8	800	55	ATM	ATM	800	55	800	55	N/A	N/A	2.8 Pa+Ps	125	2048	1/2" NPT (2 ea) Inlet/Outlet Ports	156 (71)
	8AGD-5	2500	172	50	3.5	2500	172	2500	172	N/A	N/A	5 Pa+Ps	71.4	1170	Inlet Port 3/4" NPT Outlet Port 1/2" NPT	121 (55)
	8AGD-14	5000	345	50	3.5	5000	345	5000	345	5000	345	14 Pa+Ps	26.7	437.5	Inlet Port 3/4" NPT Outlet Port 1/2" NPT	121 (55)
	8AGD-30	5000	345	50	3.5	5000	345	5000	345	5000	345	30 Pa+Ps	12.4	203.2	1/4" NPT Both Ports	121 (55)
	8AGD-60	5000	345	50	3.5	9000	620	5000	345	9000	345	60 Pa+Ps	6.2	101.6	1/4" NPT Inlet Port, 1/4" HP (BuTech) Port Outlet	121 (55)
	8AGD-150	20000	1378	50	3.5	20000	1378	5000	345	N/A	N/A	150 Pa+Ps	2.4	39.3	1/4" - H/P (BuTech) Both Ports	121 (55)
Two Stage AGT Series 8" & 14" Model AGT	8AGT-5/14	2.8 Pa to 2500[1]	2.8 Pa to 172[1]	25	1.7	2500	172	2500	172	N/A	N/A	14 Pa+2.8 Ps	35.7	585	Inlet Port 1/2" NPT Outlet Port 1/4" NPT	121 (55)
	8AGT-5/30	1 Pa to 2500[1]	1 Pa to 172[1]	25	1.7	5000	345	5000	345	N/A	N/A	30 Pa+6 Ps	35.7	585	Inlet Port 1/2" NPT Outlet Port 1/4" NPT	121 (55)
	8AGT-14/30	12 Pa to 1190[1] 2500[2]	12 Pa to 82[1] (172)	25	1.7	5000 2500[2]	345 (172)	5000	345	4000	276	30 Pa+2.1 Ps	13.2	216.3	Inlet Port 3/8" NPT Outlet Port 1/4" NPT	121 (55)
	8AGT-14/60	4.3 Pa to 2500[1]	4.3 Pa to 172[1]	25	1.7	9000	620	5000	345	N/A	N/A	60 Pa+4.3 Ps	13.2	216.3	3/8" NPT Inlet Port 1/4" -H/P (BuTech) Port Outlet	121 (55)
	8AGT-30/60	30 Pa to 2500[1] 5000[2]	30 Pa to 172[1] (345)	25	1.7	9000 5000[2]	620 (345)	5000	345	9000	620	60 Pa+2 Ps	6.2	101.6	1/4" NPT Inlet Port 1/4" -H/P (BuTech) Port Outlet	121 (55)
	8AGT-60/150	40 Pa to 3600[1] 9000[2]	40 Pa to 248 (621)	25	1.7	20000 9000[2]	1378 (621)	N/A	N/A	N/A	N/A	150 Pa+2.5 Ps	3.1	50.8	1/4" NPT Inlet Port 1/4" -H/P (BuTech) Port Outlet	121 (55)
	14AGT-125/315	82 Pa to 6000[1] 15000[2]	82 Pa to 414 (1034)	1000	6.9	35000 15000[2]	2413 (1034)	N/A	N/A	N/A	N/A	315 Pa+2.5 Ps	4.44	72.8	3/8" - H/P (BuTech) Both Ports Ports	154 (70)
Double Acting Single Stage 14" AGT	14AGD-315	35000	2413	1000	6.9	35000	2413	N/A	N/A	N/A	N/A	315 Pa+Ps	3.53	57.	3/8" - H/P (BuTech) Both Ports	154 (70)

1. Two-stage model: Supply pressure also limited by factor x air drive (Pa) to avoid interstage stall
2. If outlet pressure exceeds Maximum 1st stage pressure and supply pressure simultaneously exceeds pressure limit above the line, install interstage relief valve set at this pressure.

Port Information and Additional Notes

a. Air Drive Inlet Port – 1/2" FNPT all 4" & 5 3/4" Models
b. Air Drive Inlet Port – 3/4" FNPT all 8" & 14" Models
c. Refer to pages 19-32 for dimensional drawings of all models
d. 20 psi minimum air drive pressure for all units
e. Maximum air drive is 150 psig all models except AG-233, AG-303, AGD-1.5(130 psig)
f. 130 psig maximum drive pressure for all 8" and 14" models.
g. Gas Boosters fro Hydrogen applications must be specifically certified for use in Hydrogen Application
h. Each two stage Gas Booster has a maximum allowable inlet gas pressure to avoid a condition known as "Interstage Stall." Refer to the Knowledge Library link on the Haskel website, www.haskel.com, for a detailed explanation.

Suggested Cycling Speeds for Maximizing Seal Life	
AG, AGD, AGT Series	60 CPM
8AG, 8AGT Series	50 CPM
14AGD, 14AGT Series	40 CPM

Refer to pages 19-32 for dimensional drawings of all models.

Sample Gas Booster Flow Rate Performance (SCFM)

Flow and Pressure Performance:

Sample performance shown below is used for general reference only; consult Haskel Technical Sales or your Haskel Representative for specific performance information.

Cubic Meters Per Minute = SCFM x 0.0283

Catalog Number	PA=90 psi			
	Qa	Ps	Po	Q
AG-4	25	200	300	6.2
	25	120	300	3.6
	25	80	300	2.3
	25	40	300	1
AG-7	21	240	600	3.4
	21	180	600	2.5
	21	120	600	1.6
	21	60	600	0.7
AG-15	30	600	1200	6.2
	30	500	1200	5.1
	30	400	1200	4
	30	300	1200	3
AG-30	40	1300	2000	9.4
	40	1000	2000	7.2
	40	700	2000	4.9
	40	400	2000	2.6
AG-50	35	1700	4000	6
	35	1300	4000	4.5
	35	900	4000	3
	35	500	4000	1.7
AG-62	25	2000	5000	5.2
	25	1500	5000	3.9
	25	1000	5000	2.5
	25	500	5000	1.1
AG-75	30	2000	6000	3.8
	30	1500	6000	2.9
	30	1000	6000	1.8
	30	500	6000	0.8
AG-102	32	4000	8000	8.5
	32	3000	8000	8
	32	2000	8000	4
	32	1000	8000	2
AG-152	20	6500	13000	3.6
	20	5000	13000	3
	20	3500	13000	2.3
	20	2000	13000	1.3
AG-233	20	10000	20000	3.2
	20	8000	20000	2.8
	20	6000	20000	2.4
	20	4000	20000	1.8
AG-303	40	12500	24000	6
	40	10000	24000	5
	40	7500	24000	3.5
	40	5000	24000	2.5
AGD-1.5	30	100	200	18.2
	30	75	160	15.1
	30	50	140	10
	30	25	100	6.2
AGD-4	30	500	800	33
	30	350	600	25.4
	30	200	400	16
	30	50	200	4.5
AGD-7	30	700	1300	16
	30	500	1000	18.8
	30	300	800	11.2
	30	100	500	4
AGD-14	48	2100	3000	80
	40	1500	2500	48.4
	32	900	2000	22.5
	40	300	1000	10.4
AGD-15	40	2100	3000	50.3
	40	1500	2400	36.1
	40	900	1800	21.5
	40	300	1200	6.7
AGD-30	40	2850	4200	35.6
	40	2250	4200	25.5
	40	1550	3200	19
	40	850	2800	9.6
AGD-32	50	2950	4400	57.7
	40	2250	4400	33.2
	28	1550	4000	15.4
	33	850	3200	9.7
AGD-50	50	3000	6000	24
	50	2300	6000	12
	45	1600	5000	10
	30	900	5000	4

Catalog Number	PA=90 psi			
	Qa	Ps	Po	Q
AGD-62	50	4000	7500	35.6
	41	3250	7500	23.6
	25	2500	7500	11
	45	1000	5000	8
AGD-75	45	5000	10000	21.5
	45	3000	8000	14.3
	50	2000	6000	11.3
	50	1000	5000	5.5
AGD-102	52	8000	12000	26
	52	6000	12000	20
	52	4000	10000	16
	35	2000	10000	6
AGD-152	40	11000	22000	19.1
	25	7000	20000	6.6
	40	5000	16000	12.1
	52	3000	12000	10.7
AGD-152H	30	12000	24000	15.5
	40	10000	21000	18.3
	40	7000	18000	15
	40	5000	16000	12.1
AGT-4	20	100	400	2.7
	20	75	400	2
	20	25	200	1.2
	20	5	200	0.55
AGT-7/15	35	200	1500	4.4
	25	120	1500	1.8
	35	80	1000	2.1
	35	40	1000	1.1
AGT-7/30	32	150	3000	2.6
	40	100	2500	2.3
	40	75	2000	1.9
	40	50	2000	1.2
AGT-14/32	54	400	3000	5.8
	56	240	3000	3.7
	54	200	2400	3
	58	160	2000	2.6
AGT-14/62	54	350	6000	5.0
	56	275	5000	4.2
	54	175	4000	2.6
	58	125	4000	2.4
AGT-15/30	40	900	4000	9.7
	40	500	3000	5.8
	40	300	2000	3.9
	40	100	2000	1.2
AGT-15/50	42	400	5000	3.7
	42	250	5000	2.3
	55	150	4000	2
	55	100	4000	1.2
AGT-15/75	48	230	6000	2.7
	42	150	6000	1.4
	55	110	4000	1.5
	55	70	4000	0.8
AGT-30/50	50	850	5000	6
	50	600	5000	3.5
	62	350	4000	2
	62	100	4000	0.8
AGT-30/75	48	1300	8000	8.4
	25	700	8000	2.3
	45	400	6000	2.4
	55	100	4000	0.69
AGT-32/62	45	1700	7500	14.3
	28	1300	7500	6.7
	56	900	5000	9.8
	45	500	5000	4.3
AGT-32/102	35	1200	9500	5.1
	45	600	9500	3.3
	48	550	6500	3.3
	56	375	6500	2.6
AGT-32/152	23	450	15000	1.6
	52	250	10000	2.1
	50	150	10000	1
	55	50	3000	0.46
AGT-62/102	55	1600	10000	6
	55	1200	10000	4.5
	50	800	10000	3
	60	400	9000	1.5

Catalog Number	PA=90 psi			
	Qa	Ps	Po	Q
AGT-62/152	30	2400	18000	6.6
	35	1400	15000	4.6
	47	900	12000	4
	51	400	10000	1.8
AGT-62/152H	23	2500	19000	4.8
	25	1800	17000	4.1
	20	1200	16000	2
	20	800	15000	1.3
8AGD-1	75	130	180	128
	75	110	180	91
	75	90	160	76
	75	70	140	60
8AGD-2	75	130	250	56
	75	110	200	55
	75	90	200	41
	75	70	200	29
8AGD-2.8	70	500	700	109
	70	300	500	65
	90	200	400	55
	90	100	300	28
8AGD2-2.8	100	500	700	215
	100	300	500	131
	125	200	400	106
	125	100	300	54
8AGD-5	70	600	900	96
	70	450	800	66
	65	300	700	37
	65	100	500	12
8AGD-14	75	1000	2000	55
	75	800	1800	44
	75	500	1200	33
	75	200	1000	11
8AGD-30	75	2500	4000	76
	75	1800	3500	52
	75	1200	2800	36
	65	600	1800	18
8AGD-60	75	4000	7500	53
	75	2800	6800	36
	75	1800	5200	26
	65	1000	3800	14
8AGD-150	75	10000	18000	38
	75	8000	16000	33
	75	6000	14000	28
	65	4000	12000	20
8AGT-5/14	75	150	1200	12
	70	90	1000	8
	50	60	600	6
	40	30	400	3
8AGT-5/30	60	60	2800	1.4
	75	40	2400	0.7
	75	30	1800	0.9
	75	20	1500	0.5
8AGT-14/30	75	700	3500	19.7
	75	400	3000	10.4
	75	250	2500	6.6
	75	100	1800	2.7
8AGT-14/60	57	250	6000	3.7
	75	200	5500	3.5
	75	100	4500	1.2
	75	50	3000	0.31
8AGT-30/60	75	1700	7500	23
	75	1300	6800	17
	75	900	5000	13.8
	75	500	4000	7.8
8AGT-60/150	71	2500	18000	14.2
	75	1500	15000	9.4
	75	1000	12000	7
	75	500	8000	4
14AGD-315	150	16000	32000	25.3
	150	13000	28000	23
	150	9000	24000	18.1
	150	5000	18000	10.2
14AGT-125/315	115	4100	32000	14.9
	133	3100	28000	13
	150	2200	24000	10
	150	1000	18000	4.2
4AG-25	2	2000	2250	0.75
	2	1500	2250	0.6
	2	1000	2250	0.5
	2	500	2250	0.2

LEGEND

Pa = Air Drive Pressure
Ps = Gas Supply Pressure
Qa = Air Drive Quantity
Po = Gas Outlet Pressure
Q = Gas Outlet Flow Rate

Alternative Gas Booster and System Models

Specialty Gas Booster Models

Standard Model Number	Oxygen Booster Model Number	Hydrogen Booster Model Number
4AG-25	86921	
AG-4	28596	
AG-7	29818	
AG-15	28598	
AG-30	17445	87083
AG-50	86911	
AG-62	17436	86979
AG-75	17418	86980
AG-102	86912	
AG-152	29877	86981
AG-233		
AG-303		
AGD-1.5	52618	
AGD-4	26266	
AGD-7	51147	86982
AGD-14	83008	
AGD-15	27962	86983
AGD-30	17495	86984
AGD-32	52570	86985
AGD-50	86913	
AGD-62	27961	86986
AGD-75	51269	86987
AGD-102	86914	
AGD-152		86988
AGT-4	28597	
AGT-7/15	51308	86989
AGT-7/30	52065	86990
AGT-14/32		
AGT-14/62		83007
AGT-15/30	28007	86992

Standard Model Number	Oxygen Booster Model Number	Hydrogen Booster Model Number
AGT-15/50		
AGT-15/75	28595	86993
AGT-30/50	86915	
AGT-30/75	17599	86994
AGT-32/62	27267	86995
AGT-32/102		
AGT-32/152		
AGT-62/102		
AGT-62/152		
AGT-62/152H	26180	
8AGD-1	58808	
8AGD-2	58675	59060
8AGD-2.8	80642	
8AGD2-2.8		
8AGD-5	52623	
8AGD-14	52612	87218
8AGD-30	52619	87201
8AGD-60	80867	87185
8AGD-150		
8AGT-5/14	52624	
8AGT-5/30	52630	
8AGT-14/30	52622	
8AGT-14/60		
8AGT-30/60	58979	
8AGT-60/150		
14AGD-315		
14AGT-125/315		

Inert Gas Booster System Models

Standard Model Number	Standard System Model Number	Oxygen System Model Number
4AG-25	87114	82880
AG-4		
AG-7		
AG-15		
AG-30		
AG-50		
AG-62		
AG-75		
AG-102		
AG-152		
AG-233		
AG-303		
AGD-1.5	80501	80523
AGD-4	59933	80524
AGD-7	82101	80525
AGD-14	80502	80526
AGD-15	80503	80527
AGD-30	80504	52341
AGD-32	80505	80528
AGD-50		
AGD-62	80506	80529
AGD-75	80507	80530
AGD-102		
AGD-152	80508	
AGT-4	80004	80531
AGT-7/15	54961	80532
AGT-7/30	53353	53343
AGT-14/32		
AGT-14/62	85431	
AGT-15/30	29068	26968

Standard Model Number	Standard System Model Number	Oxygen System Model Number
AGT-15/50		
AGT-15/75	53748	53796
AGT-30/50		
AGT-30/75	52031	53742
AGT-32/62	29498	53150
AGT-32/102		
AGT-32/152	80509	
AGT-62/102		
AGT-62/152	80511	
AGT-62/152H	80512	
8AGD-1		
8AGD-2	80413	80533
8AGD-2.8	80414	80534
8AGD2-2.8		
8AGD-5	80515	80535
8AGD-14	80516	80536
8AGD-30	80517	80537
8AGD-60	81266	
8AGD-150		
8AGT-5/14	80518	80538
8AGT-5/30	80519	80539
8AGT-14/30	54895	53398
8AGT-14/60	80520	80540
8AGT-30/60	56131	80541
8AGT-60/150		
14AGD-315		
14AGT-125/315		

Inert Gas Booster Systems

Haskel's ability to incorporate and interface electronic controls into systems provides precise compression and control of gases.

Standard system components are:

1. Booster with External Pilot Modification to enable use of external components to start/stop the booster.
2. Adjustable Air Pilot Switch (inlet) – used to stop the booster when supply pressure falls to adjusted set point.
3. Adjustable Remoteset Air Pilot Switch (outlet) – used to stop the booster when outlet pressure reaches adjusted set point.
4. Pressure Gauge indicates outlet boosted pressure.
5. Pressure Gauge indicates inlet gas pressure supply
6. Gas Filter used to stop any ingested contamination from entering the booster (e.g. while changing out a gas supply bottle)
7. Roll Bar Frame (not shown) used for mounting booster and other components.
8. Air Filter - inline filter (20-40 micron) for maintaining air drive quality.
9. Adjustable Air Regulator used to set the Air Drive Pressure (0 - 150 psi max)
10. Air Pressure Gauge indicates the Air Drive Pressure
11. Manual On/Off Valve and Speed Control Valve used to adjust cycling speed that the booster cycles
12. Relief Valve used to protect the booster & other components from over pressurization
13. Adjustable Remoteset Pilot Regulator used to adjust the set point for the Remoteset Air Pilot Switch
14. Pressure Gauge used to indicate the Adjustable Remoteset Regulator adjusted pressure
15. Interstage Cooler – a tube & shell cooler used to reduce the boosted gas temperature (part of the booster)

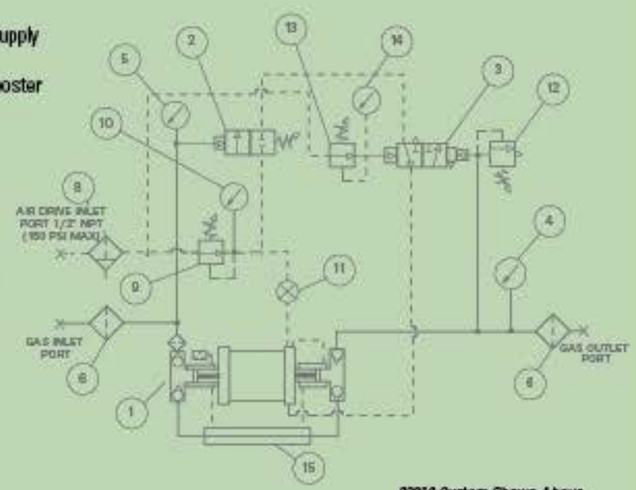

26068 System Shown Above

Charging Systems

Charging systems provide a fast, efficient and economical method of charging, or "topping up" gas pressures. Charging units ensure that the optimum use is made of commercially bottled gases down to as low as 150 psi or vaporized liquid (cryogenic) supplies while producing pressures as high as 39,000 psi depending on gas type. Units are standard or custom-built in a variety of configurations, samples of which are illustrated here.

26968 Oxygen Booster System

Oxygen booster systems for filling oxygen cylinders. An efficient, safe and economical system for oxygen handling.

(A) Outlet stall (max gas outlet pressure is: Air drive psi x 30 Plus 2x gas inlet psi)
(B) Interstage stall (Max gas inlet pressure is air drive psi x 15 if outlet exceeds air drive psi x 30. If it does not, max gas inlet is air drive psi x 30)
(C) If less air flow is available, outlet gas rates will decrease about in proportion

26968 Sample Performance

Oxygen Gas Pressure - PSI		Oxygen Outlet Gas Flow - SCFM		
		Air Drive PSI		
Inlet	Outlet (B)	60	80	100
250	1500	3.5	4.0	4.0
250	2000	2.1	2.1	3.6
250	3000	(A)	(A)	2.5
1000	1500	8.7	14.7	15.0
1000	2500	(B)	9.7	13.7
1000	3500	(B)	9.6	13.6
1500	2000	(B)	14.7	20.7
1500	2500	(B)	(B)	16.1
1500	3000	(B)	(B)	(B)
2000	2500	(B)	(B)	21.6

Performance based on indicated Air Drive PSI @ 50 SCFM (C)

Mini Charging Booster

Designed and Manufactured to achieve an affordable and effective gas transfer and charging unit. Standard configuration includes cylinder mounting bracket.

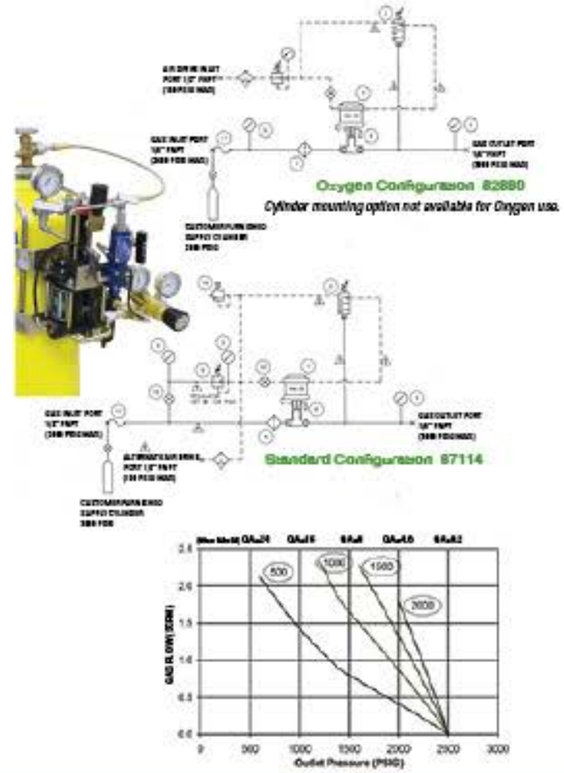

ScubAmp

Used by Dive Shops to boost medium pressure breathing air from storage air direct to dive tanks to reach maximum fill pressure rapidly. With the use of a ScubAmp, existing air compressor systems can stay within their 200-2500 psi normal operating range.

TYPICAL FILL TIMES

From Pressure in Storage (After Equalizing in Dive Tank)	To Nominal Tank Size and Pressure			
	83 cu. Ft. to 3000 psi	71.2 cu. Ft. to 2475 psi	71.2 cu. Ft. to 2250 psi	80 cu. Ft. to 4400 psi
2500 psi	12 sec.			60 sec.
2250 psi	28 sec.	14 sec.		90 sec.
2000 psi	39 sec.	22 sec.	12 sec.	
1500 psi	75 sec.	50 sec.	35 sec.	

Performance based on 100 psi air drive @ 50 SCFM.

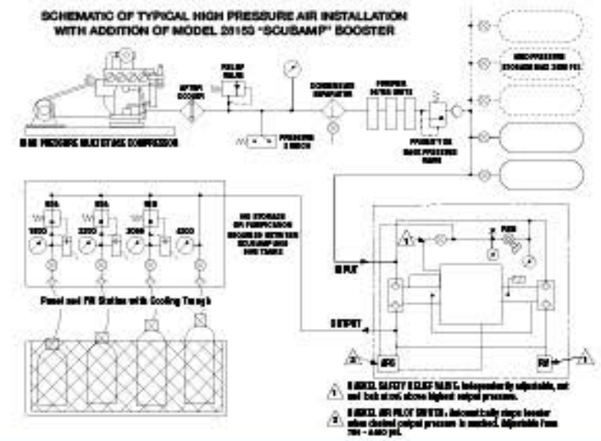

Gas Transfer, Test & Charging Carts

Typical gases used are O2, N2, He, Ar & Air used for transfer, charging, testing, calibration or tool operation.

Console Controlled Test Systems

Test console housing pneumatic Gas Booster selected to meet test parameters of the customers specification. Gas pressures can be produced up to 39,000 psig.

Natural Gas Vehicle Fueling Systems

Natural Gas Boosting System with Storage eliminates the need for mechanical compressors where high pressure and low pressure Natural Gas sources are available.

Gas Cylinder Test Rigs

Hydrostatic and cylinder stretch test rigs for inspection and testing of all gas cylinder and pressure vessels, including oxygen, nitrogen, carbon dioxide and halon bottles.

Hydraulic Driven Gas Boosters

For flow rates that typically go beyond the capability of pnematic driven boosters.

Haskel's gas booster product line began with hydraulic driven gas boosters. Their gas compression technology has been proven in critical applications such as Fuel Cell / Hydrogen, Photovoltaic, Semiconductor, Specialty Gases, and more.

Capable of boosting a variety of gases, Haskel's broad range of Hydraulic Driven Gas Boosters offer complete flexibility for your gas compression and transfer needs. The key design elements incorporated in this range are based on the Haskel technology that has been combined with cutting edge hydraulic drive control to provide a complete solution, from plug-in electrical supply to reliable gas output pressure and flow.

Applications

- Hydrogen Filling Stations
- Charging high-pressure gas cylinders and receivers
- Gas assisted plastic injection molding
- Hydraulic accumulator charging
- Charging air bag storage vessels
- Missile and satellite launch and guidance systems
- Component testing
- Laser cutting and welding
- Oilfield high volume gas testing
- Automotive hoses and component gas testing
- Hot isostatic pressing
- Inert/specialty gas transfer
- Biogas charging
- Extending pressure
- Gas blanketing

Hydraulic Driven Gas Booster Model Number Configuration

100	HGT	6	-	85/50	-	EX
Design Series	Design Type	Stroke Length		Ratio		Switch
100 120	HGT = 2 Stage HGD = Double Acting	6 10		xx / xx		-NP (No Proximity Switch) -PS (Proximity Switch, Inert Gas Service) -EX (Explosion Proof Switch)

Designs

Single-Stage Double Acting Models

- Available in 7 models with flow rates to **400 scfm** and maximum supply and outlet pressures to **16,000 psig**
- Designed for high flow and low-to medium compression ratios

Two-Stage Models

- Available in 8 models with flow rates to **45 scfm**. Maximum supply pressure 6000 psig. Maximum outlet pressure to **16,000 psig**
- Modular construction for easy gas section maintenance
- Adapts to multiple units in parallel or in series driven by one power source

Optional Features (normally provided by Haskel distributor or system integrator)

- Motor starter
- Inlet pressure control loop
- Temperature control loop
- Water chiller - Cooling loop
- Remote operator station
- Heater hydraulic reservoir
- Noise attenuating panels

Varying applications require many different booster and horse power (HP) combinations. Haskel can assist with HP and Cooling requirements and provide circuitry assistance on the following issues: PID Control - review and advisement, electrical control, and heat exchanger recommendations. General HPU recommendations and guidelines are available from Haskel drawing 87100-TAB.

Features

- Stainless Steel/Monel gas barrel construction
- Oil Free, gas section non-lubricated operation
- Integrated cooling barrels on each gas section
- Isolation between hydraulic and gas sections to prevent contamination.
- 6in. and 10in. stroke models
- Proximity switch control to automate cycling
- Able to accept high supply pressures

Benefits

- Capable of flow rates up to 8 x higher than air driven models
- Modular construction for easy gas section maintenance
- Will not rust like other carbon steel manufactured units
- Non-contaminating gas compression
- Minimizes gas temperature rise from compression
- Suitable for ultra pure gas compression
- Broad range of flows and pressures
- Smooth stroke direction changeover and cycle rate control
- Multiple gas boosters can be driven by one power source
- Steady state cycle control to maximize seal life
- High efficiency for continuous operation

LEGEND
HP = Horsepower Input based on Max. Hyd. Pressure 2500 psig
Ps= Gas Supply Pressure (PSI)
Po= Gas Outlet Pressure(PSI)
CPM= Cycles Per Min. (18 max 120 series, 25 max. 100 series)
Q=Gas Outlet Flow Rate (SCFM)

Part Number	Hydraulic Driven Gas Booster Specifications										Sample Performance				
	Supply Pressure Minimum		Supply Pressure Minimum		Outlet Pressure Maximum		Maximum Compression Ratio	Displacement Cycle		Cycles Per Minute	Hydraulic Pressure : 2500 PSI				
	PSIG	BAR	PSIG	BAR	PSIG	BAR		Cubic Inches	Milliliters		HP Input	Ps	Po	CPM	Q
100HGD6-145	50	.11	1850	4	1850	4	6	312	5106	25	22.4	150	900	25	39.0
											27.0	250	1200	25	64.5
											28.2	500	1500	25	131.2
											27.2	1050	2000	25	280
100HGD6-115	50	.11	2750	6	2750	6	6	191	3128	25	22.0	200	1400	25	30.5
											26.6	275	1800	25	41.7
											27.3	725	2300	25	115
											27.7	1200	2800	25	193
100HGD6-85	100	.21	6000	13	6500	14	6	107	1760	25	16.9	500	2000	25	44.1
											27.4	690	3500	25	59.0
											28.5	1800	4750	25	159
											27.2	3200	6000	25	272
100HGD6-50	100	.21	9000	19.3	13500	29	6	40	657	25	19.3	1200	6000	25	37.4
											24.0	1600	8000	25	49.4
											27.2	2500	10000	25	78.3
											27.2	4500	12000	25	129
120HGD10-165	50	.11	1850	4	1850	4	6	716	11728	18	25.1	75	550	18	36.0
											43.4	175	1100	18	77.7
											44.4	250	1200	18	111
											42.4	300	1200	18	133
120HGD10-85	100	.21	6000	13	6500	14	6	179	2931	18	24.2	800	2500	18	87.6
											27.0	1200	3200	18	131
											40.4	1300	4600	18	129
											39.5	2500	5800	18	265
120HGD10-50	100	.21	9000	19.3	13500	29	6	68	1111	18	29.6	1400	7000	18	55.3
											35.4	1800	9000	18	70.5
											41.2	2200	11000	18	85.4
											48.0	2800	13500	18	107
100HGT6-145/85	50	.11	1850	4	6500	14	104	156	2556	25	16.8	250	2200	25	33.6
											20.4	300	2800	25	40.0
											23.7	400	3500	25	52.8
											27.3	500	4000	25	65.7
100HGT6-145/50	50	.11	1850	4	6500	14	280	156	2556	25	27.1	150	3200	25	18.9
											28.0	150	3800	25	18.9
											28.4	150	4950	25	18.8
											28.6	150	5500	25	18.8
100HGT6-115/85	50	.11	2750	6	6500	14	64	95	1556	25	19.0	250	2200	25	21.1
											23.1	300	2800	25	25.1
											25.7	400	3500	25	33.2
											29.8	500	4000	25	41.3
100HGT6-115/50	50	.11	2750	6	13500	29	171	95	1556	25	14.6	175	3500	25	14.1
											14.7	175	4000	25	14.1
											17.4	175	5000	25	14.0
											20.8	250	6000	25	11.5
100HGT6-85/50	100	.21	6000	13	13500	29	96	53	868	25	17.5	300	5000	25	13.8
											22.6	400	7000	25	31.0
											24.8	500	8000	25	22.6
											28.7	750	10000	25	33.7
120HGT10-165/85	50	.11	1850	4	6500	14	144	358	5866	18	28.8	175	2800	18	39.8
											33.8	200	3500	18	45.2
											43.4	200	4500	18	45.1
											46.3	250	5000	18	55.8
120HGT10-165/50	50	.11	1850	4	13500	29	386	90	1474	18	47.2	100	4000	18	22.2
											47.1	100	5000	18	22.1
											51.8	110	7000	18	24.1
											52.2	110	8000	18	24.6
120HGT10-85/50	100	.21	6000	13	13500	29	96	34	557	18	31.4	300	7000	18	16.9
											32.4	600	8000	18	33.2
											38.3	700	10000	18	38.6
											48.4	900	13500	18	49.4

REFER TO PAGES 33 - 35 FOR DIMENSIONAL DRAWINGS OF ALL MODELS

Applications for Pneumatic and Hydraulic Driven Gas Boosters and Gas Booster Systems

General Applications

- Condenser Leak Detection
- Gas Transfer Circuit Breakers
- Aircraft Jacking
- Helicopter Pop Floats
- Autoclaving - Low Pressure
- Hot Isostatic Presses
- Automotive Air Bag Vessel Filling
- Helium Leak Pressure Testing
- Blow Molding
- Boost Pressures from N2/O2 Generators
- Breathing Air Systems
- Laser Cutting (Ar, N2,O2, He)
- CFC Recovery
- Leak Detection Systems
- Charging Gas Suspensions
- Missile Test Systems
- Cooling with Helium in Pilot Plants
- Nitrogen Injection for Molding Machines
- Cryostat Testing (Nitrogen and Argon)
- Nitrogen Accumulator Charging
- Die Cushion Cylinder Charging
- Oxygen Life Support Bottles
- Escape Chute Charging – Co2 Charging
- Oxygen Boosting
- Fuel Cells; Mobile, Portable and Stationary
- Power Valve Actuation/Hold Dump Valves Closed
- Gas Assisted Injection Molding (GAIN)
- Gas Charging for Aircraft Tire Inflation
- Pressure Testing of Hydraulic Systems – Skydrol
- Gas Pressure and Leak Testing
- Super Critical Fluid Extraction
- Gas Reclaim - Low Pressure
- Testing Brake Calipers
- Cylinder Hydro Test

Hydrogen Applications

Haskel Manufactures the most extensive range of gas handling solutions for gas transfer or boosting applications, including **Hydrogen**. **Hydrogen** use products include Pneumatic or Hydraulic Driven Gas Boosters, Diaphragm Compressors, and BuTech High Pressure Valves and Fittings, that are Hydrogen rated to over 20,000 psig.

- Hydrogen Infrastructure
- Hydrogen Fueling & Filling Stations
- Hydrogen Compression, Storage & Transfer
- Fuel cell: Mobile, Portable & Stationary
- Boosting H2 Generator Outlet Pressure
- Hydrogen Purification
- Hydrogen Generation
- Hydrogenation
- PTA manufacture
- Polysilicon manufacture
- Petroleum recovery and refining
- Hydrogenation reactions
- Cylinder filling for storage from H2 generation
- R&D lab gas distribution
- Power generation (used as a coolant)
- Semiconductor manufacturing

Pneumatic Driven Gas Boosters for Hydrogen Applications

Booster Model	Supply Pressure	Flow SCFM @ psi*	Pressure Limit (psi)	Hydrogen System Model #
AG-62	1000	4.21 @ 4800	9,000	86979
AG-75	1500	3.81 @ 6000	12,000	86980
AG-152	2000	3.02 @ 12000	15,000	86981
AGD-7	150	6.85 @ 710	2,500	86982
AGD-15	500	10.68 @ 1700	4,000	86983
AGD-30	750	8.12 @ 3150	9,000	86984
AGD-32	750	10.75 @ 3150	4,000	86985
AGD-62	1000	6.97 @ 5800	9,000	86986
AGD-75	1500	6.18 @ 7500	12,000	86987
AGD-152	2000	5.07 @ 14000	15,000	86988
AGT-7/15	100	2.63 @ 1410	2,500/4,000	86989
AGT-7/30	100	2.30 @ 2820	2,500/9,000	86990
AGT-14/62	250	5.8 @ 4000	2,500/9,000	86991
AGT-15/30	500	5.88 @ 3400	4,000/9,000	86992
AGT-15/75	250	2.34 @ 7250	4,000/12,000	86993
AGT-30/75	500	2.70 @ 7250	9,000/12,000	86994
AGT-32/62	1000	8.08 @ 6800	4,000/9,000	86995
AGT-32/152	350	1.93 @ 13750	4,000/15,000	86996
AGT-62/152	1000	3.80 @ 14500	9,000/15,000	86997

Based on 100 psi Drive Pressure and 48 SCFM (Pa-100, Qa=48)

Booster Model	Supply Pressure	Flow SCFM @ psi*	Pressure Limit (psi)	Hydrogen System Model #
8AGD-14	150	9.20 @ 980	5,000	87219
8AGD-30	750	14.26 @ 3150	5,000	87201
8AGD-60	1000	9.47 @ 5800	9,000	87185
8AGT-14/30	500	10.73 @ 3400	5,000	87226
8AGT-14/60	250	3.87 @ 6000	9,000	87225
8AGT-30/60	1000	10.4 @ 6800	9,000	87224

Based on 100 psi Drive Pressure and 95 SCFM (Pa-100, Qa=95)

Diaphragm Compressors

Single and multi-stage models with displacements to 400 SCFM (680 m3/hr) and pressures to 30,000 psi (2000 bar). A variety of head closure designs, power-frames, accessories, and materials of construction.

Diaphragm Compressors offer: Non-contaminating, leak-tight compression, corrosion resistance, increased diaphragm life, low closure torque, highly sensitive leak detection and high efficiency.

Diaphragm Compressor Applications

Specialty and Industrial Gas

- High/Ultra High Purity Gas Compression
- Rare and Expensive Gases (Xenon, Krypton)
- Gas Transfer from Tube to Cylinders
- Gas Recovery Systems
- TFE Monomer
- Gas Blending Operations

Chemical/Petrochemical

- PTA
- Gas Recycle Systems
- Gas to Liquid (GTL)
- Reaction Feed Gas Charging
- Vapor Deposition
- Hydrogenation

Photovoltaic Installations

- Polysilicon Production (H2 & Chlorosilanes)
- Silane Production
- Silicone Vent Recovery
- Mixed Chlorosilane Recovery
- HCL Purification
- Hydrogen Purification

Pilot Plants

- Petrochemical Research
- University Research Studies
- Pharmaceutical Research
- Medical Gas Filling
- Instrument Testing

Semiconductor

- Silane Production
- NF3 Production
- Fluorine Compression
- BF3 Compression
- SiF4 Compression
- SiH4 Compression
- Tube Trailer/Cylinder Filling

Model 1533
1 SCFM (1.6Nm3/h)
Discharge Pressure 3,000 PSI (206 BAR)
5.0 HP (1.1kW)

Model 2000
8 SCFM (14M³/hr)
Discharge Pressure 15,000 PSI (1034 BAR)
5.0 HP (4.00kW)

Selecting Your Accessories

Haskel can either provide accessories separately or supply them fitted to form a complete package suited to your application. Additionally, Haskel can fit customer nominated accessories. Our accessories catalog is available and our technical support team is always ready to advise you on the most suitable choice of accessories for your application.

A full range of high-pressure regulators, valves, switches and ancillary equipment is available to suit all our gas boosters.

- Air pilot switches
- Air pilot valves
- Regulating relief valves
- Directional control and release valves
- Hydraulic accumulators, gas receivers and storage cylinders
- High pressure valves, fittings and tubing
- Plenum chambers
- Port adapters
- Pressure Regulators
- Gauge snubbers
- Filters
- Stainless steel check valves
- Intensifiers with integral checks for cycling
- Capillary type gauge snubbers

Please ask for your copy of our latest accessories brochure.

Regulating Relief and Back Pressure Control Valves
Provide over pressure protection on any high pressure low flow gas or liquid system. (See system accessory catalog.)

Air Pilot Switches
These pressure switches produce a pneumatic signal up to 150 psi at any sensing pressure within their adjustment range.

Gas Receivers
Gas receivers in 10,000 and 20,000 psi series. Eleven models from 20 to 897 cu. in. displacements. (See system accessory catalog.)

Filters
- 5 Microns
- 6000 psi, 30,000 psi 2 models 1/4' NPT and 1/4" S.P. tube
- S.S. or paper elements

Stainless Steel Check Valves
- Constructed throughout of 316 series stainless steel for high corrosion resistance.

- A PTFE semi soft seat for higher contamination tolerance without leakage. The PTFE initially deflects a slight amount then the ball or poppet to come to rest against the metal seat so the PTFE does not have to absorb the full load of the high pressure.

Directional Control and Release Valves
Directional Control valves are basically a family with common characteristics and benefits. They are seated poppet or ball design for virtually zero leakage at high pressures with low viscosity fluids.

Intensifiers
Intensifers with integral checks for cycling. All stainless steel in high pressure wetted section.

Pneumatic Driven Gas Booster Dimensional Drawings

Air Drive Inlet Port = ½" FNPT all the Models

Gas Booster Model: 4AG-25

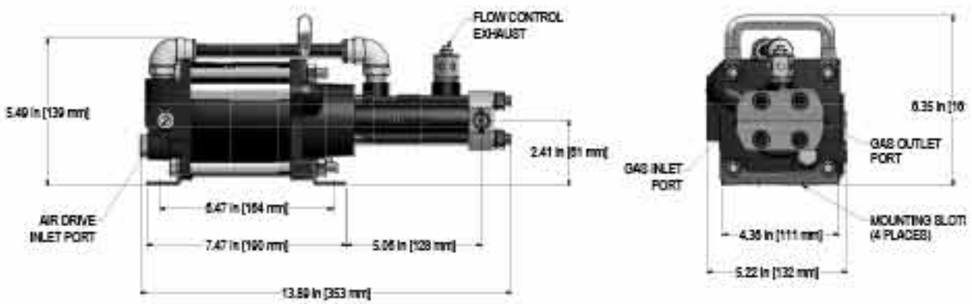

Gas Booster Model: AG-4

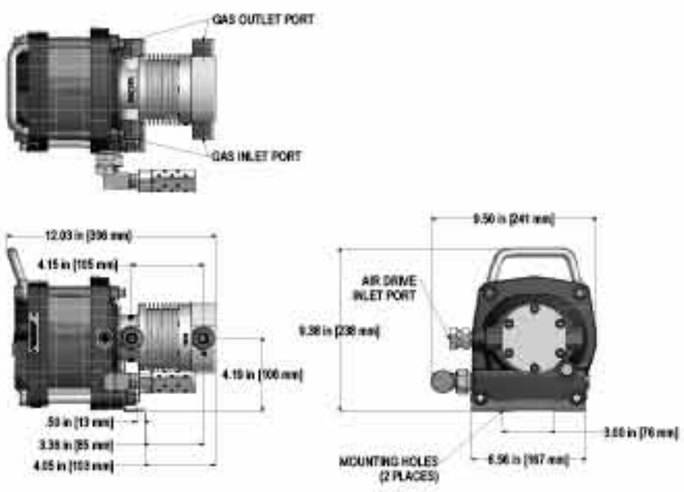

Gas Booster Model: AG-7

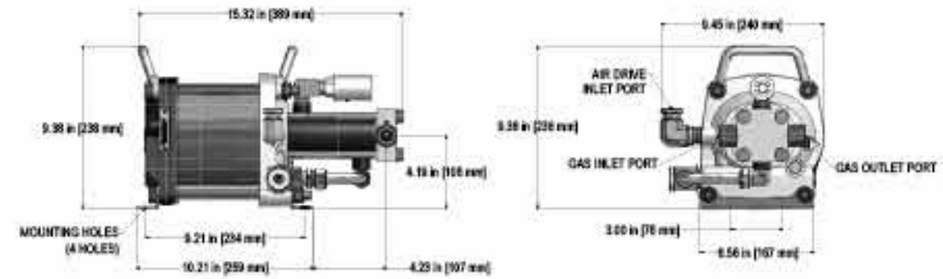

Gas Booster Models: AG-15, AG-30, AG-50, AG-75

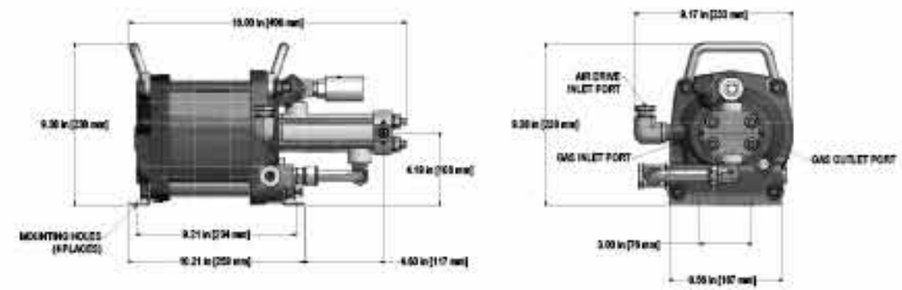

Gas Booster Models: AG-62, AG-102, AG-152

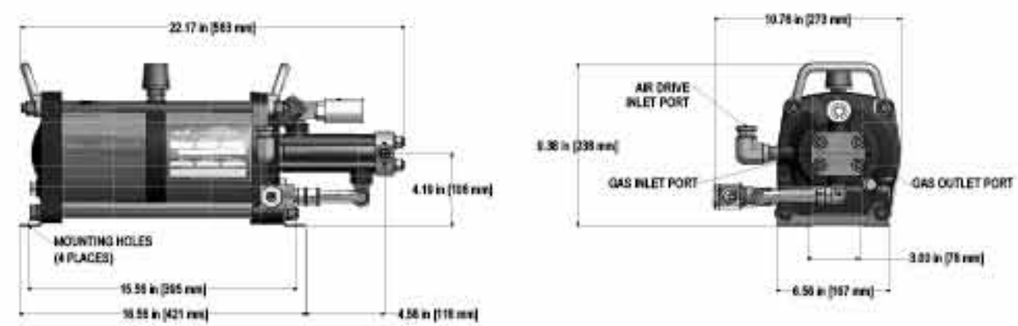

Gas Booster Models: AG-233

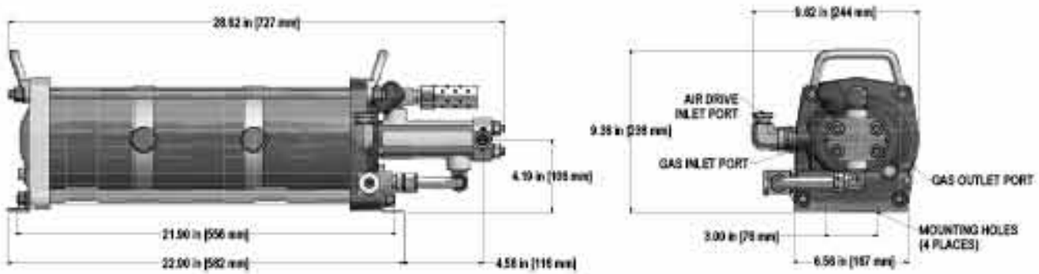

Gas Booster Models: AG-303

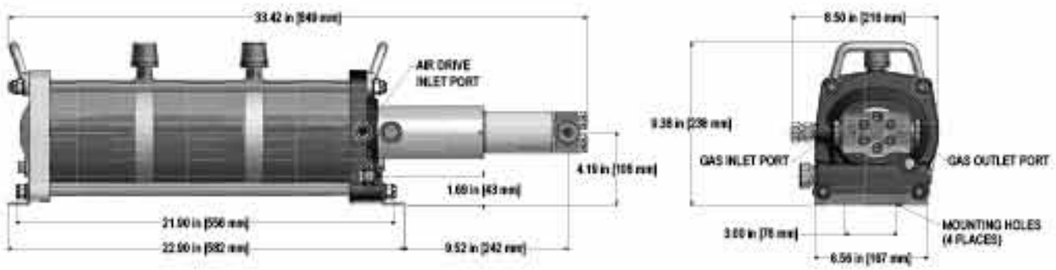

Gas Booster Models: AGD-1.5

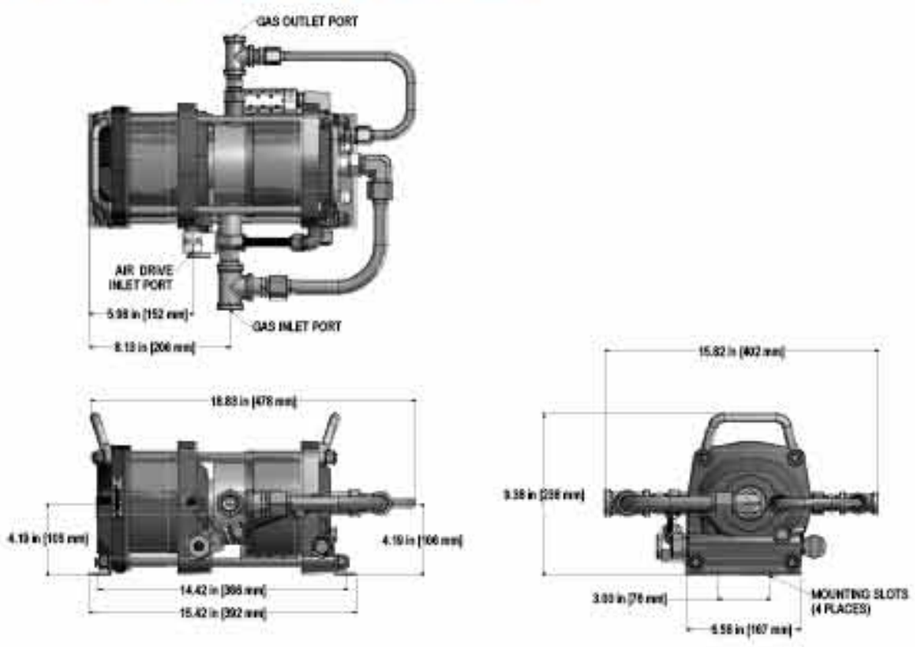

Gas Booster Models: AGD-4

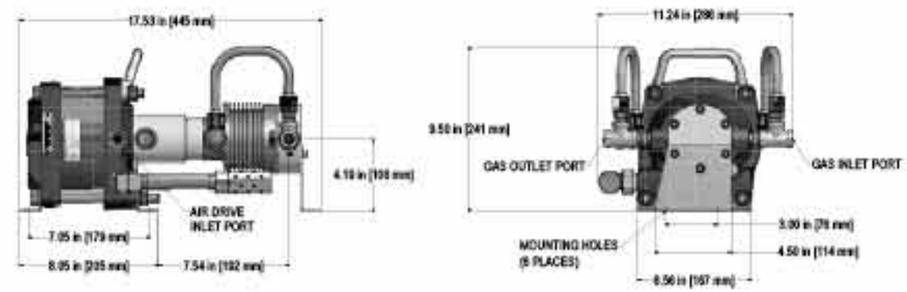

Gas Booster Models: AGD-7

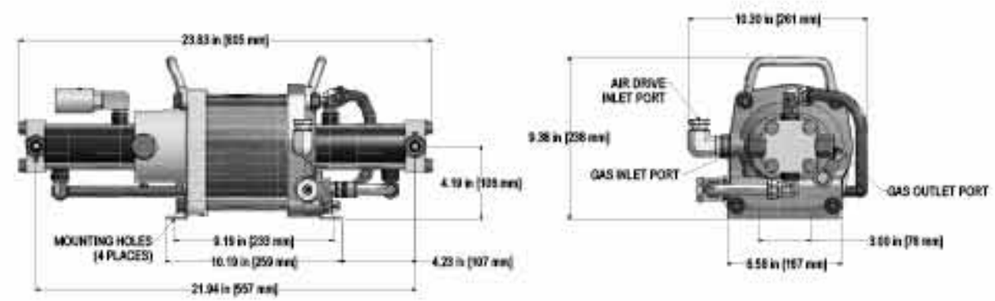

Gas Booster Models: AGD-15, AGD-30, AGD-50, AGD-75

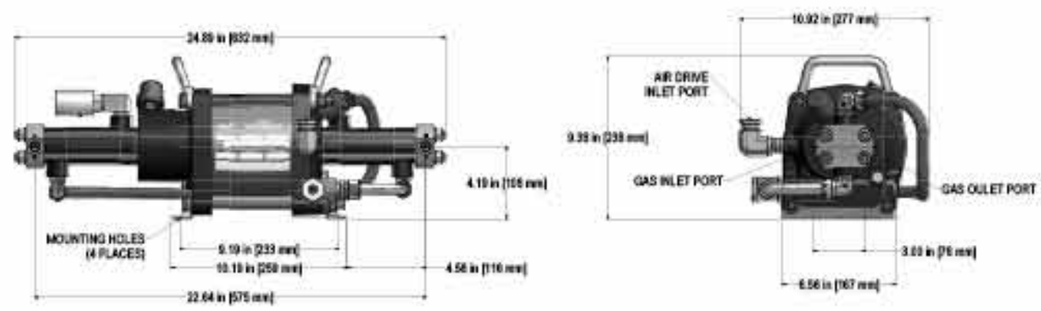

Gas Booster Models: AGD-14

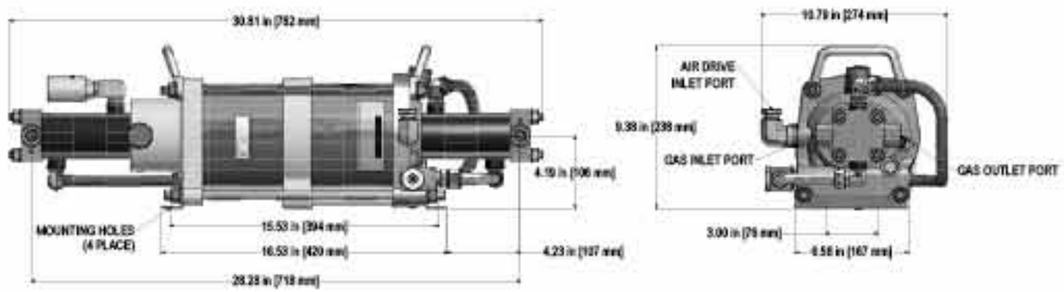

Gas Booster Models: AGD-32, AGD-62, AGD-102, AGD-152

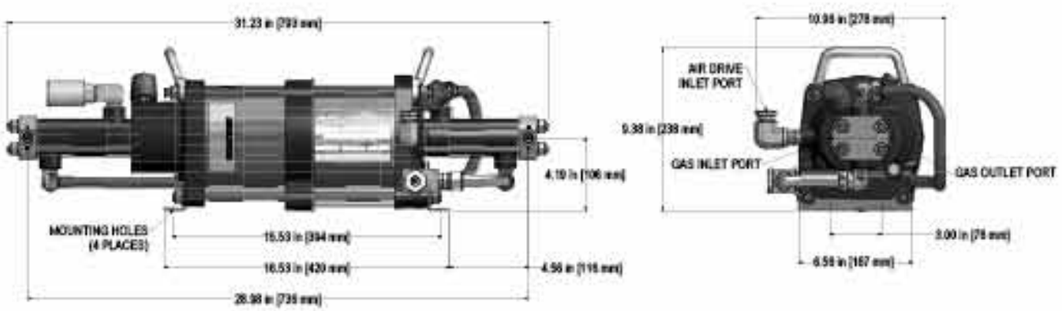

Gas Booster Models: AGT-4

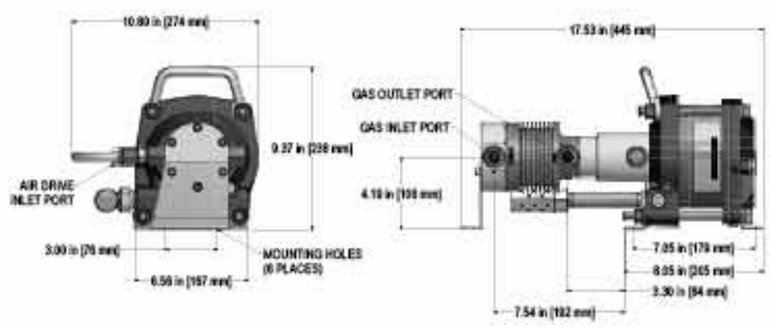

Gas Booster Models: AGT-7/15, AGT-7/30

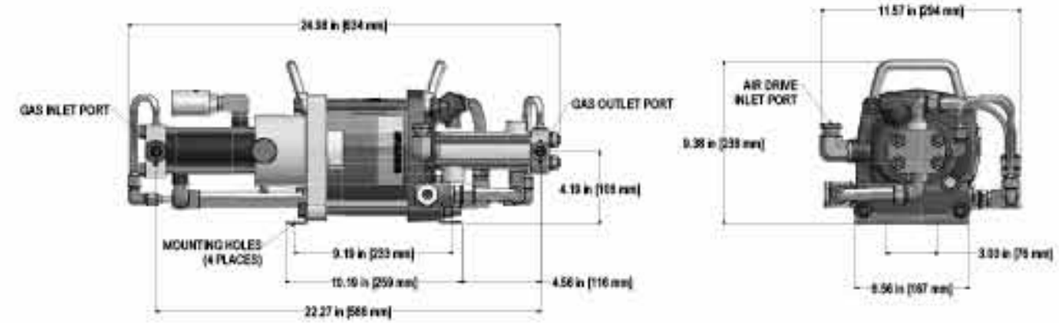

Gas Booster Models: AGT-15/30, AGT-15/50, AGT-15/75, AGT-30/50, AGT-30/75

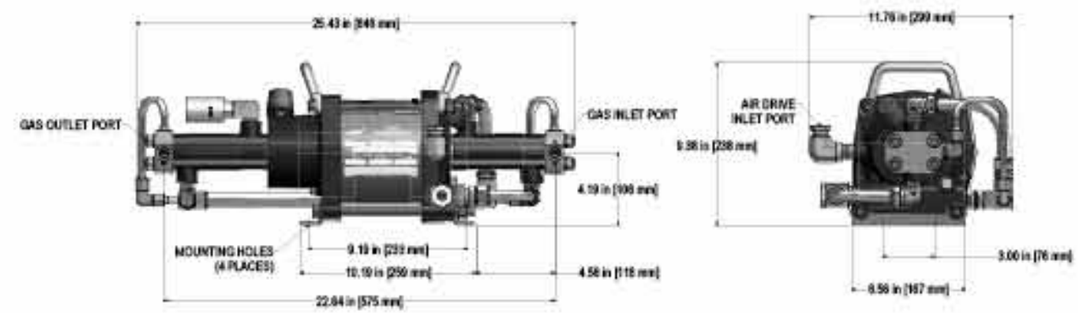

Gas Booster Models: AGT-14/32, AGT-14/62

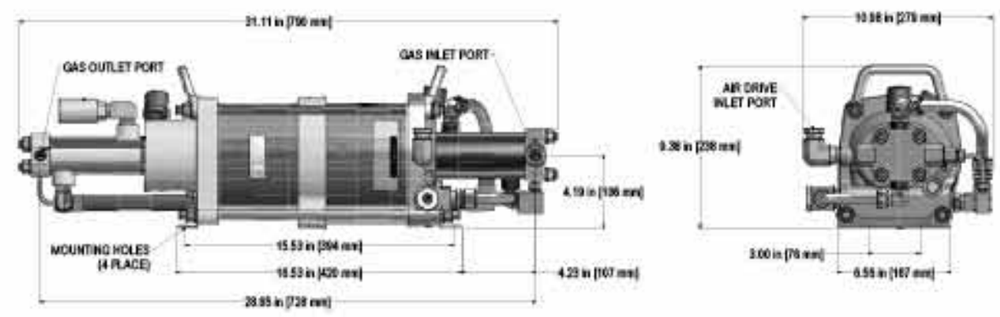

Gas Booster Models: AGT-32/62, AGT-32/102, AGT-32/152 AGT-62/102, AGT-62/152, AGT-62/152H

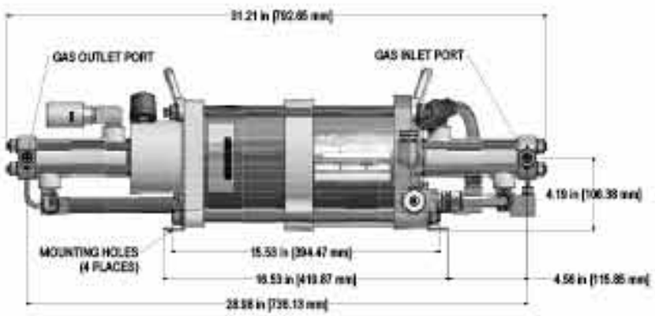

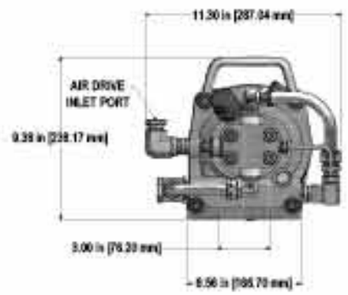

8" Series Gas Boosters Air Drive Inlet Port = ¾' FNPT all Models

Gas Booster Model: 8AGD-1

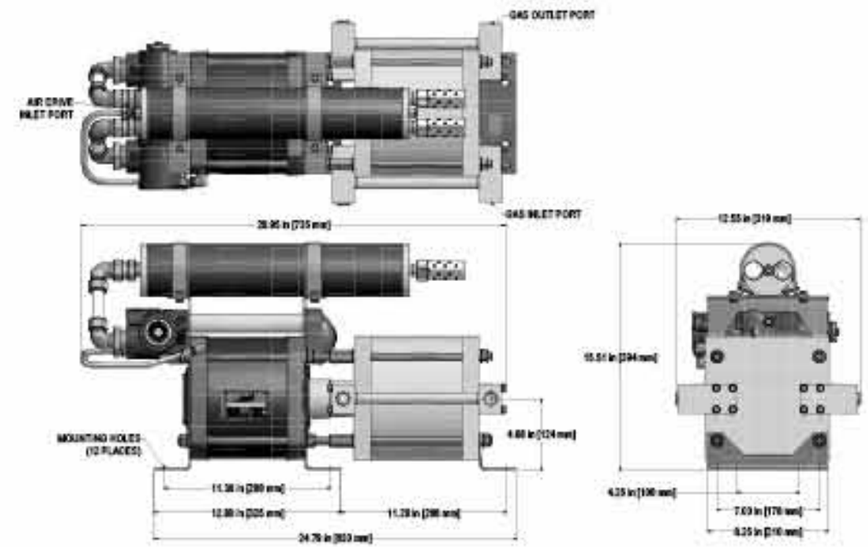

Gas Booster Model: 8AGD-2

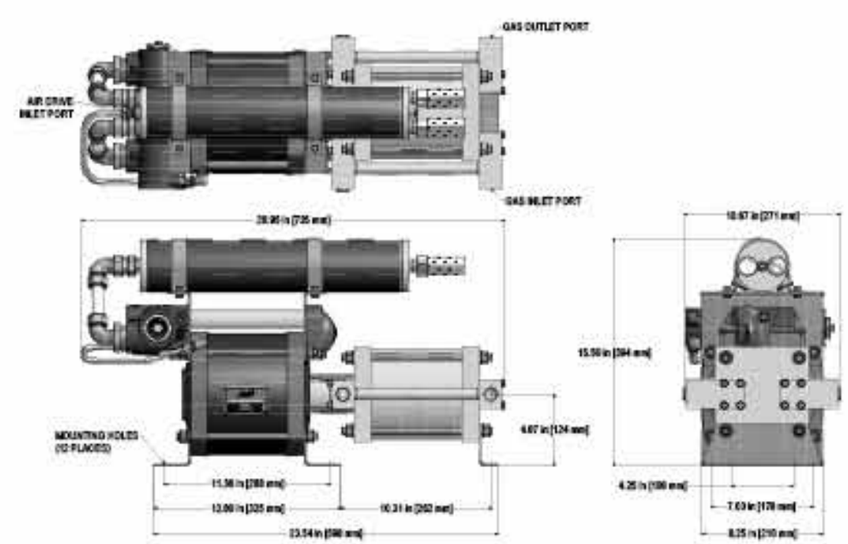

Gas Booster Models: 8AGD-2.8, 8AGD-2.8H

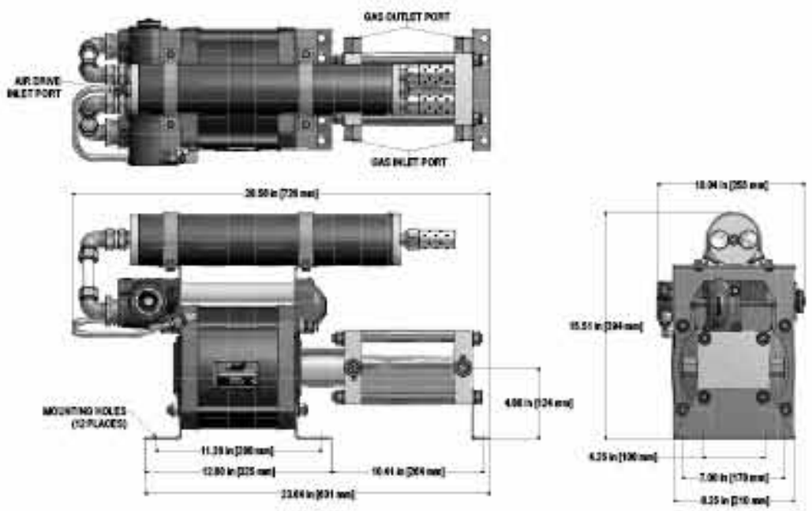

Gas Booster Model: 8AGD2-2.8

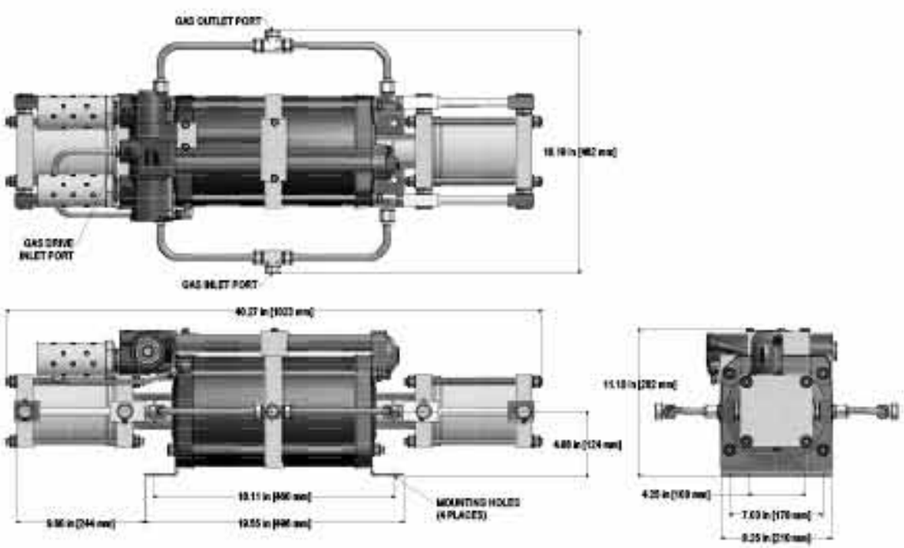

Gas Booster Model: 8AGD-5

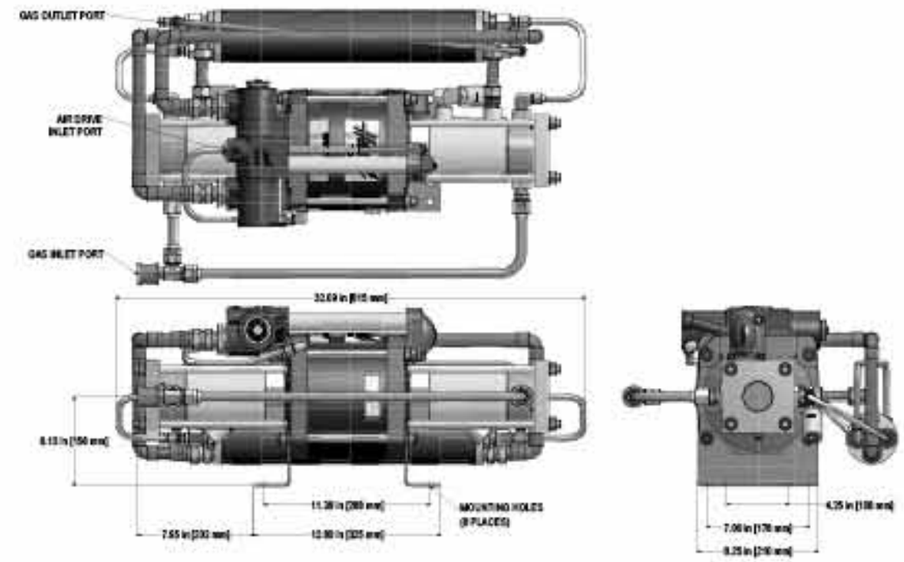

Gas Booster Model: 8AGD-14

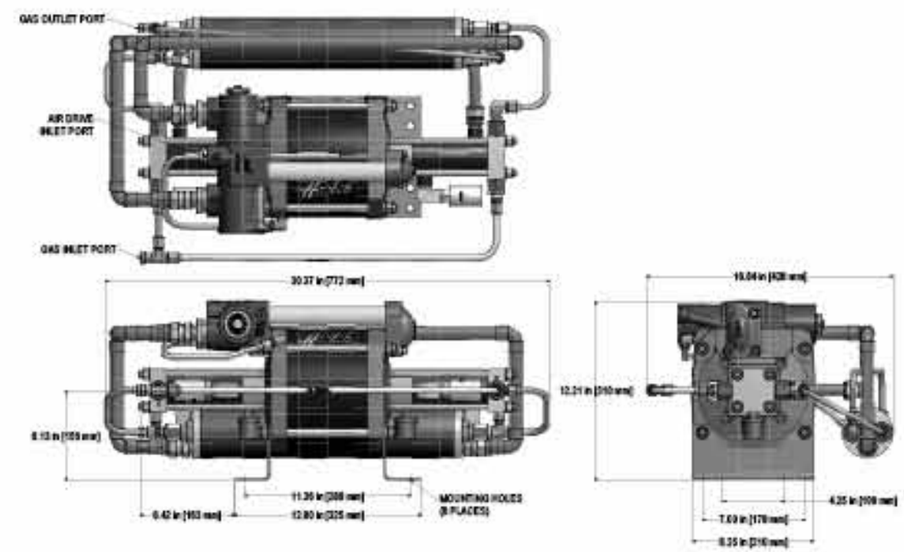

Gas Booster Models: 8AGD-30, 8AGD-60

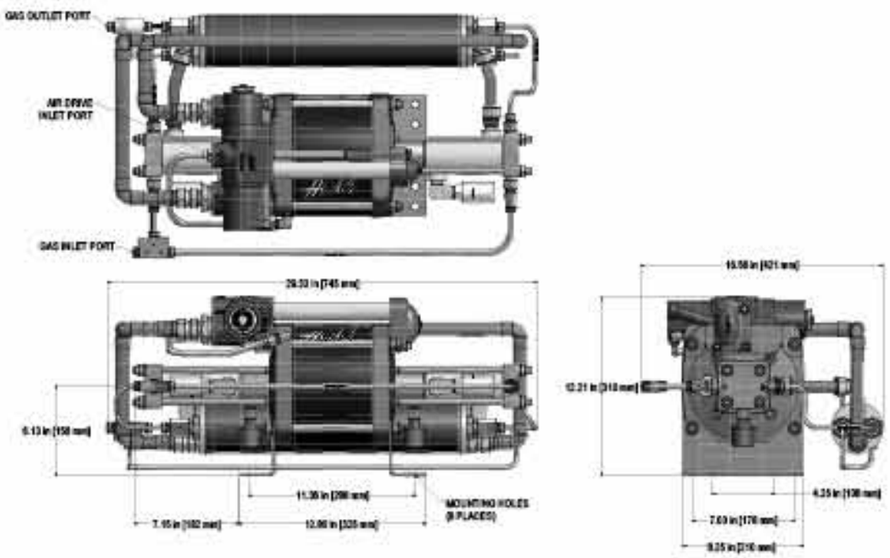

Gas Booster Model: 8AGD-150

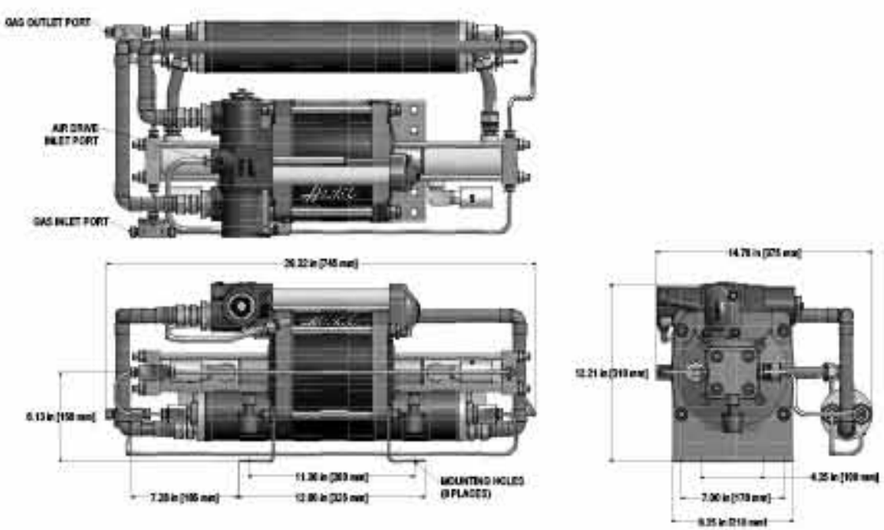

Gas Booster Model: 8AGT-5/14

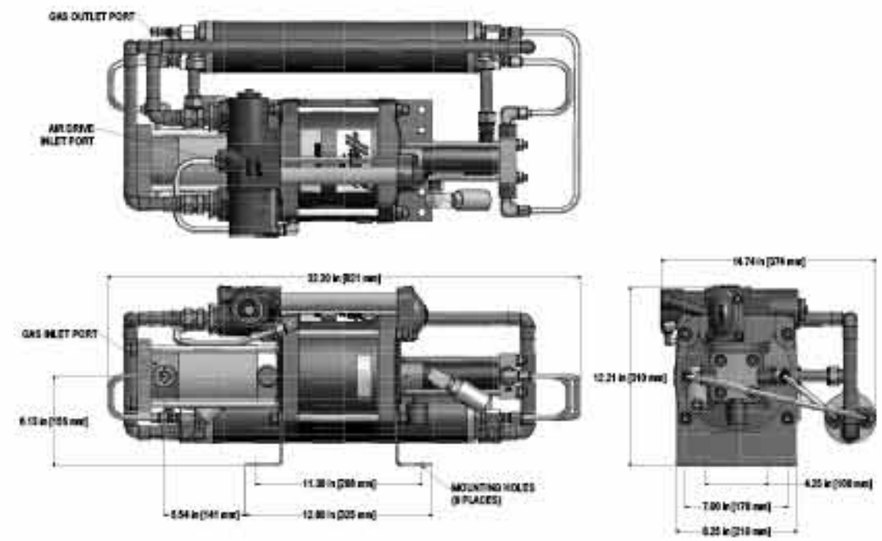

Gas Booster Model: 8AGT-5/30

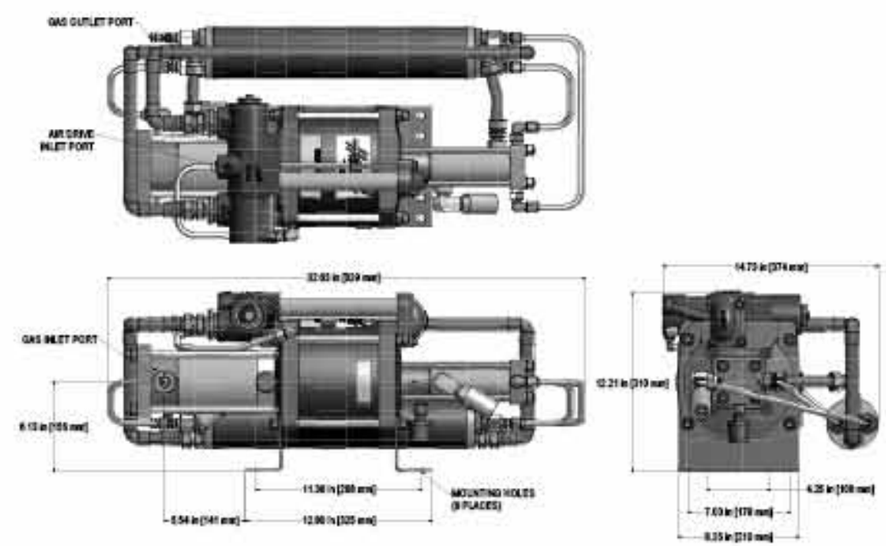

Gas Booster Models: 8AGT-14/30, 8AGT-14/60

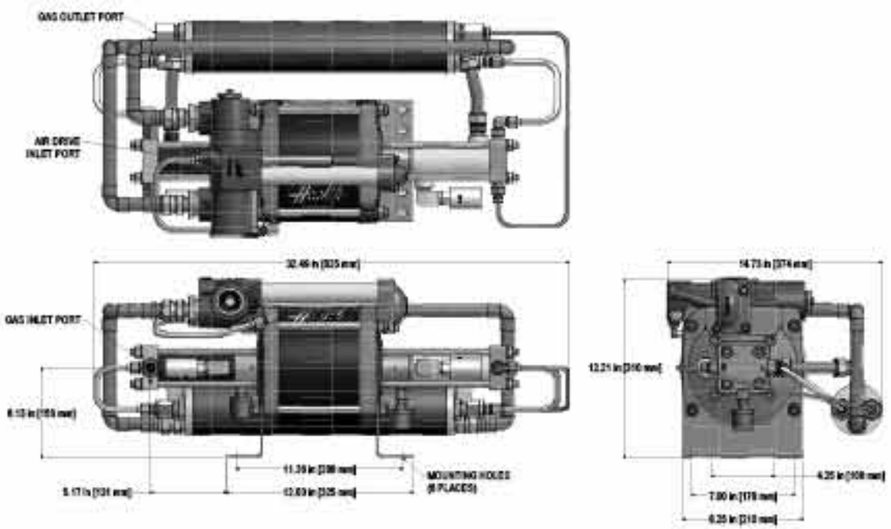

Gas Booster Model: 8AGT-30/60

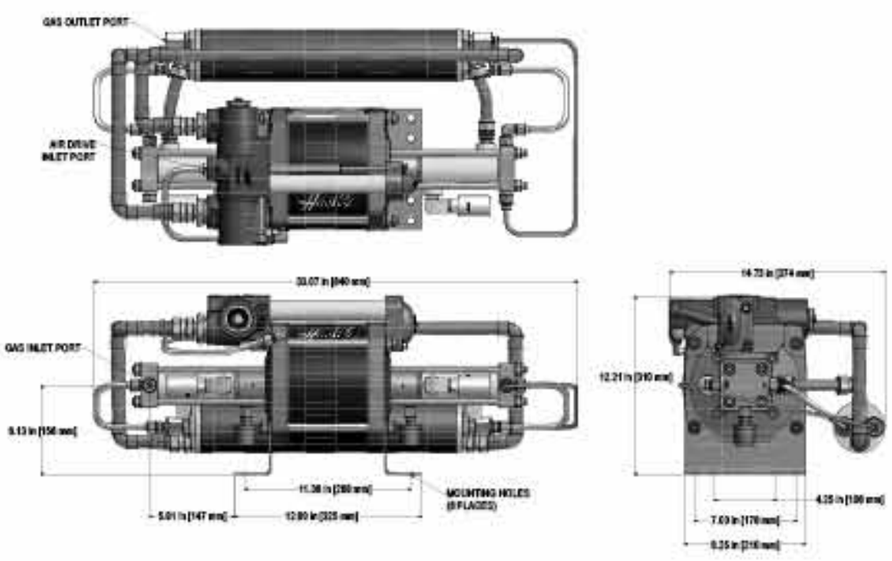

Gas Booster Model: 8AGT-60/150

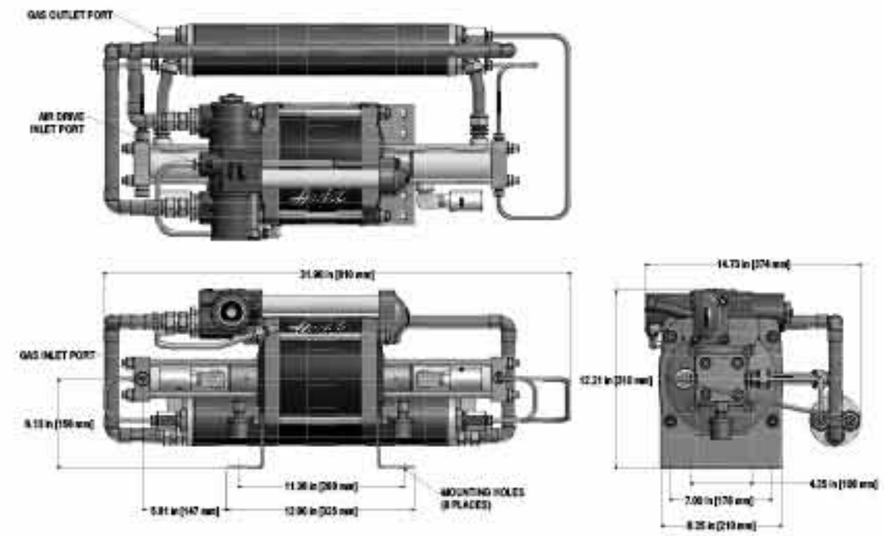

14" Series Gas Boosters Air Drive Inlet Port = ¾" FNPT all Models

Gas Booster Model: 14AGT-125/315

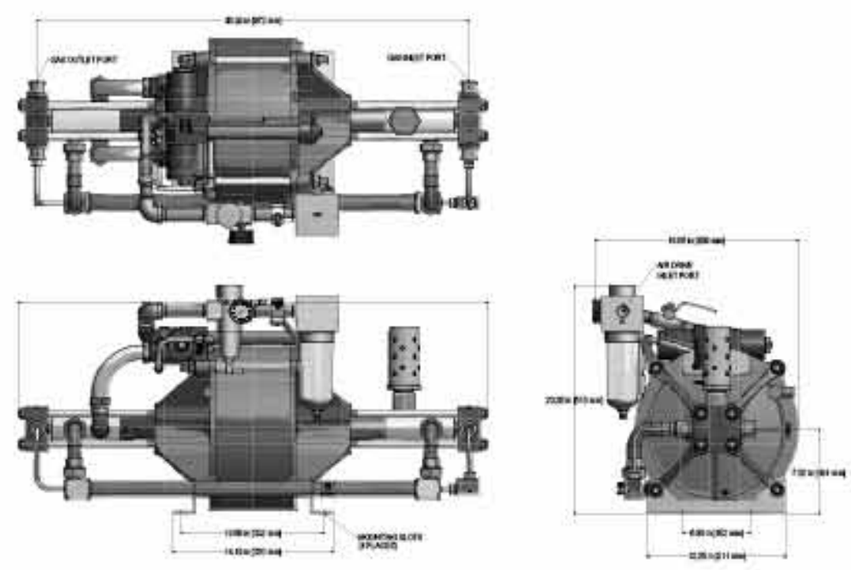

Gas Booster Model: 14AGD-125, 14AGD-315

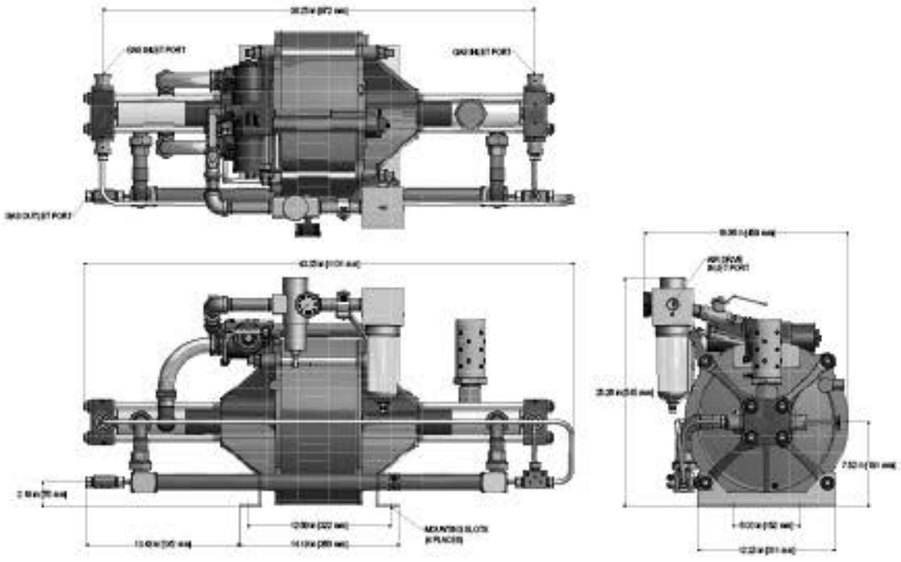

Hydraulic Driven Gas Booster Dimensional Drawings

Hydraulic Connections:

120HGD10, 120 HGT10 models : 1 in SAE female ports (2) rated at 3500 psi max.

100HGD6, 100HGT6 models : 1/2 in SAE female ports (2) rated at 3500 psi max.

Gas Connections:

120HGD10, 120 HGT10, 100HGD6, 100HGT6 models ratios:

-50, ¼ in SAE female port (Inlet), 9/16 M/P BuTech Port (2 ports each dbl acting, single two stage), Outlet rated 16,000 psig, 120 series, 13,500 psig 100 series, Inlet ports 6500 psig both series

-85, 1 in SAE female port (Inlet), ¼ in SAE female port (Outlet) (2 ports dbl acting, single two stage), Outlet rated 6,500 psig, both series, Inlet ports 6000 psig both series

-115, 1 in SAE female port (Inlet), ¾ in SAE (outlet), (2 ports each dbl acting, single two stage), rated 3600 psig

-145, 1 in SAE female port (Inlet), ¾ in SAE (outlet), (2 ports each dbl acting, single two stage), rated 2250 psig

-165, 1 in SAE female port, (2 ports each dbl acting, single two stage), rated 1850 psig

Gas Booster Model: 100HGD6-50, 100HGD6-85, 100HGD6-115, 100HGD6-145

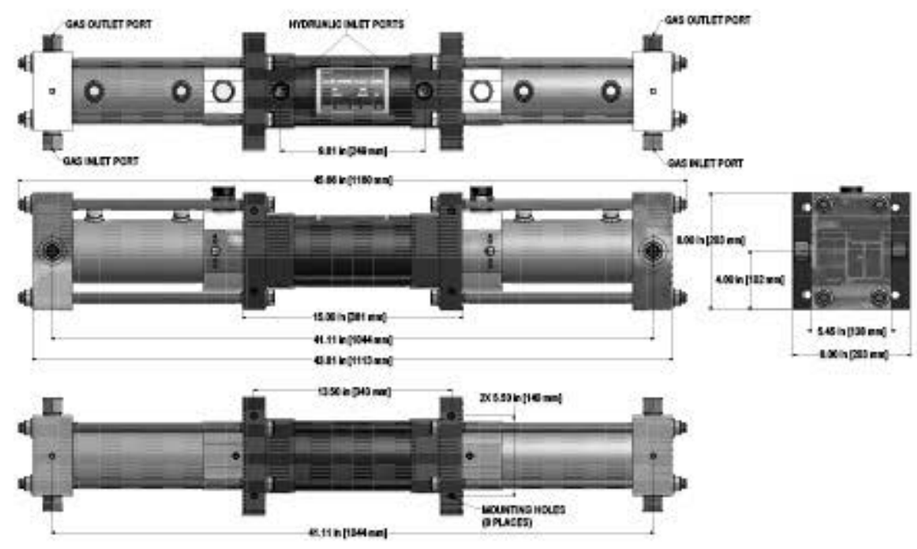

Gas Booster Model: 100HGT6-85/50, 100HGT6-145/50

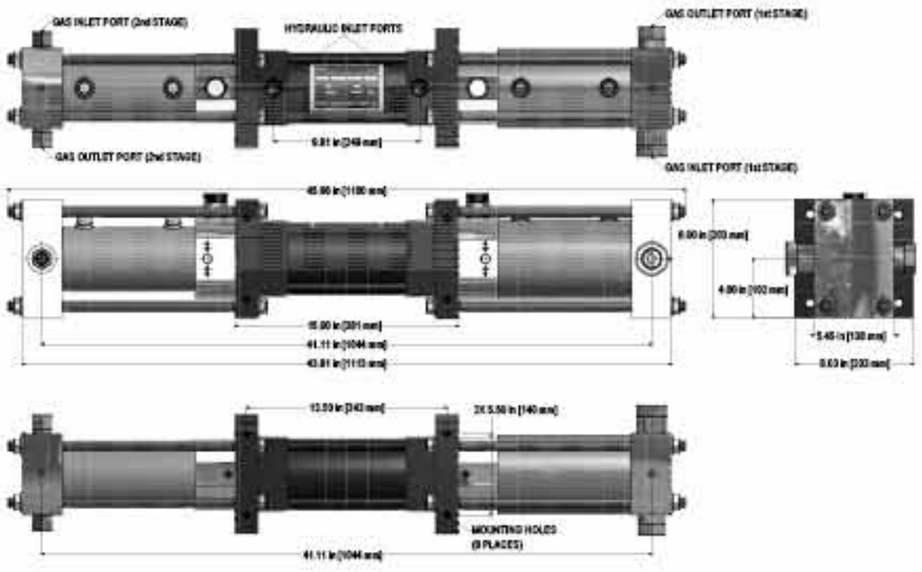

Gas Booster Model: 120HGT10-85/50, 120HGT10-165/85

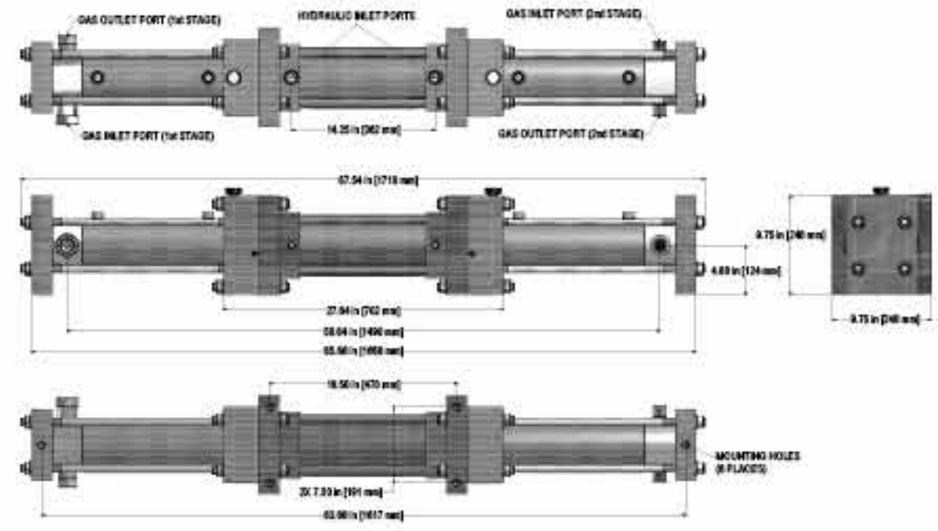

Gas Booster Model: 120HGD10-50, 120HGD10-85, 120HGD10-165

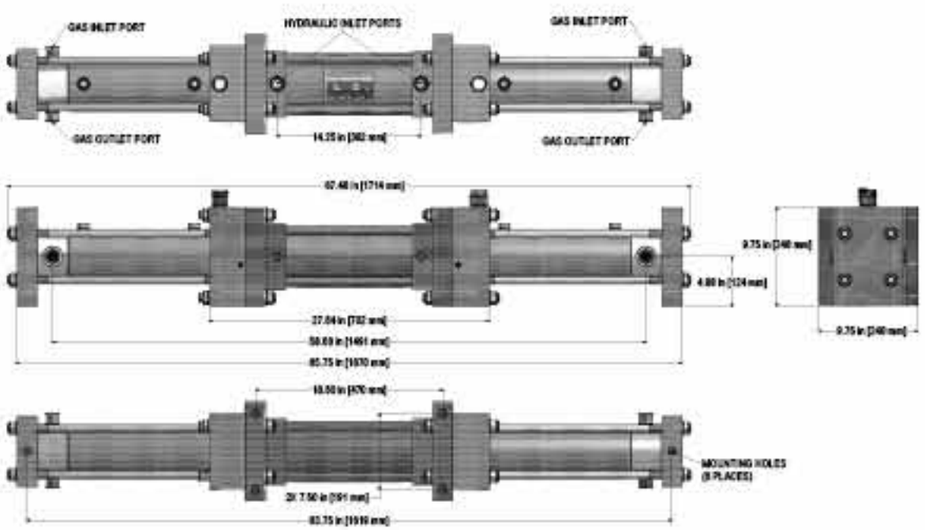

CELEBRATING 65 YEARS OF HYDRAULIC AND PNEUMATIC ENGINEERING EXPERIENCE IN THE DESIGN AND MANUFACTURING OF HIGH PRESSURE GENERATING EQUIPMENT AND CONTROLS

Haskel International, Inc.
100 East Graham Place
Burbank, CA 91502 USA
Tel: 818-843-4000
Fax: 818-556-2549 or 818-841-4291
Email: sales@haskel.com
www.haskel.com

Haskel Europe Ltd.
North Hylton Road
Sunderland SR5,3JD, England, UK
Tel: 44-191-549-1212
Email: sales@haskel.co.uk
www.haskel-europe.com

Haskel Middle East
Hamilton Sundstrand Industrial
P.O. Box 262384 Jebel Ali, Dubai, United Arab Emirates
Tel: 971-4886-2686
Fax: 971-4886-2684
Email: sales@haskel.ae
www.haskel.ae

Haskel Asia
Hamilton Sundstrand Singapore Industrial Pte. Ltd.
23 Tagore Lane, #03-06
Tagore 23 Warehouse Complex
Singapore 78760
Tel: 65-6455-7559
Fax: 65-6455-2841
Email: sales@haskel.com.sg\
www.haskel.com.sg

For further information on Haskel products, please visit us online at www.haskel.com

GB 08-11